FACTOR 800

TDG AUDIO

GENERAL INFORMATION

- Before installing the speakers, carefully plan the locations of the speakers accounting for potential electrical, plumbing, and other fixtures.
- Keep speakers approximately 2 feet away from corners and other surfaces that might interfere with or cause sound reflection.
- Contact your local dealer if you need help installing the speakers.

INSTALLATION

- Prior to actual installation of the speakers, it is necessary to run cable to the speaker locations.
- For new construction applications, a new construction bracket may be installed prior to drywall to allow precise placement and ease of final installation.
- For existing construction applications, use this cut out template. If you are not sure of potential obstruction behind the mounting area, start by cutting a smal hole at a 45 degree angle towards the inside of the hole in the center of your penciled mounting hole. Cutting a small hole at an angle first will make drywall repair much easier if necessary. (See diagram below.)
- Once confirmed that there is no obstruction behind the mounting area, finish cutting the hole at a 90 degree angle.
- Connect the speaker cable while ensuring proper polarity with the amplifier, + to + and – to –.
- Insert the speaker and tighten all four mounting screws on the front of the speaker. CAUTION: Do not overtighten the screws. This could damage the speaker, wall surface, or both.
- Adjust the speaker to your preferred settings and attach the grill.

SIDE VIEW OF CEILING

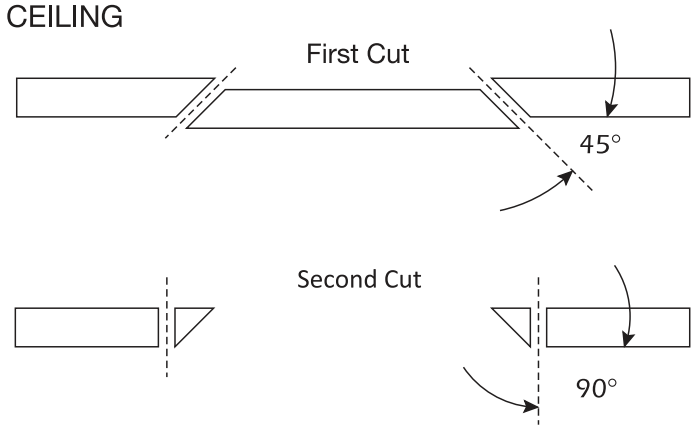

Cut Out Template

PAINTING

- We highly recommended that you paint the grills prior to installation. If you decide to paint the in the future, it is best to remove the grills by simply detaching them from the speaker. When painting the grills, remove the clothe material behind the grill and be careful not to clog the holes of the grill. Make sure the paint is completely dry before reattaching.

INSTALLATION GUIDE / CUTOUT TEMPLATES

LIMITED LIFETIME WARRANTY

TDG Audio warrants to the original retail purchaser only that this TDG Audio product will be free from defects in materials and workmanship, provided the speaker was purchased from a TDG Audio Authorized Dealer.

Defective products must be shipped, together with proof of purchase, prepaid insured to the TDG Audio Authorized Dealer from whom they were purchased, or to the TDG Audio factory at the address listed on this installation instruction manual.

Freight collect shipments will be refused. It is preferable to ship this product in the original shipping container to lessen the chance of transit damage. In any case, the risk of loss or damage in transit is to be borne by the purchaser.

If upon examination at the Factory or TDG Audio Authorized Dealer, it is determined that the unit was defective in materials or workmanship at any me during this warranty period, TDG Audio or the TDG Audio Authorized Dealer will, at its upon, repair or replace this product at no additional charge, except as set forth below.

If this model is no longer available and can not be repaired effectively, TDG Audio, at its sole upon, may replace the unit with a current model of equal or greater value. In some cases where a new model is substituted, a modification to the mounting surface may be required. If mounting surface modification is required, TDG Audio assumes no responsibility or liability for such modification.

All replaced parts and products become the property of TDG Audio Products replaced or repaired under this Warranty will be returned to the original retail purchaser, within a reasonable me, freight prepaid.

This Warranty does not include service or parts to repair damage caused by accident, disaster, misuse, abuse, negligence, inadequate packing or shipping procedures, commercial use, voltage inputs in excess of the rated maximum of the unit, or service, repair or modification of the product which has not been authorized or approved by TDG Audio. This Warranty also excludes normal cosmetic deterioration caused by environmental conditions. This warranty will be void if the Serial Number on the product has been removed, tampered with or defaced.

This Warranty is in lieu of all other expressed warranties. If the product is defective in materials or workmanship as warranted above, the purchaser’s sole remedy shall be repair or replacement as provided above. In no event will TDG Audio be liable for any incidental or consequential damages arising out of the use or inability to use the product, even if TDG Audio or a TDG Audio Authorized Dealer has been advised of the possibility of such damages, or for any claim by any other party.

Some states do not allow the exclusion or limitation of consequential damages, so the above limitation and exclusion may not apply. All implied warranties on the product are limited to the duration of this expressed Warranty. Some states do not allow limitation on the length of an implied warranty. If the original retail purchaser resides in such a state, this limitation does not apply. In our attempt to constantly improve our products, features and specifications are subject to change without notice.

LIMITED
LIFETIME
WARRANTY