TDG AUDIO

RADIATE SERIES

RLPS-6T

Indoor / Outdoor Weatherproof Speakers

Decades of design and engineering experience have culminated in the new RADIATE Series of outdoor speakers. A great sounding speaker is nothing if it succumbs to the elements and fails. The RADIATE Series is designed to be the best sounding outdoor speakers we have ever made AND the most reliable. Featuring secure weatherproof covers for terminals and switches.

Instead of ports we now use passive radiators to increase bass performance. Passive radiators allow enclosures to be smaller and deliver the same amount or more bass than an enclosure without one. In short, small size and big bass! The other acoustic benefit is an increase in power handling. Of course each of our speakers is backed by our **LIFETIME WARRANTY.**

KEY FEATURES

- 70V Tap Settings: N/C, 8Ω, 20W, 10W, 5W, 2.5W
- 100V Tap Settings: N/C, 8Ω, 40W, 20W, 10W, 5W
- Power Handling: 5/100 WPC
- Designed to IP-66 and Military Standard 810G Specifications
- Durable All-Weather Construction
- Enclosure Material: UV Treated, Glass-Filled, AVS Cabinet
- Enclosure Type: Sealed with Passive Radiator
- Finish: Black Matte
- Includes: Surface Mount Bracket, Pendant Hardware, and 8” Landscape Ground Stake plus Stand
- **LIFETIME WARRANTY**

TDG AUDIO

RADIATE SERIES

RLPS-6T

Indoor / Outdoor Weatherproof Speakers

ACOUSTIC SPECIFICATIONS

- High-Frequency Driver: 1” (25.4mm) Aluminum Dome Tweeter
- Low-Frequency Driver: 6.5” (165.1mm) Aluminum Cone Woofer
- Sensitivity: 87dB SPL
- Impedance: 8Ω / 70V / 100V
- Frequency Response: 100Hz – 20kHz

MECHANICAL SPECIFICATIONS
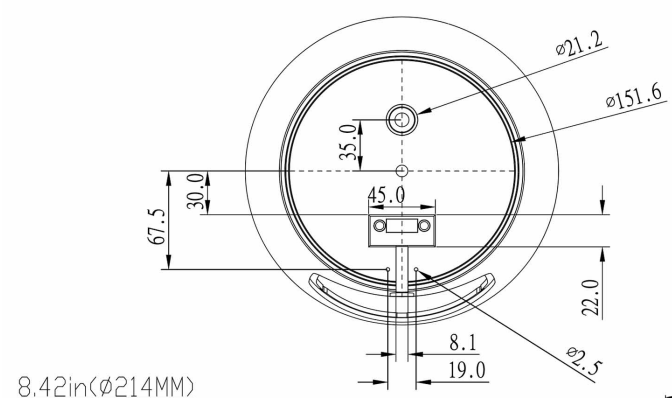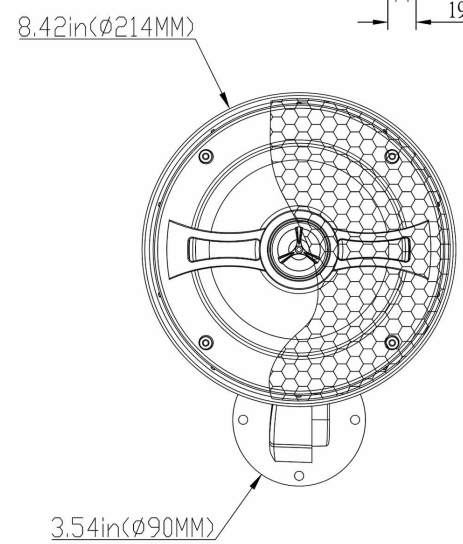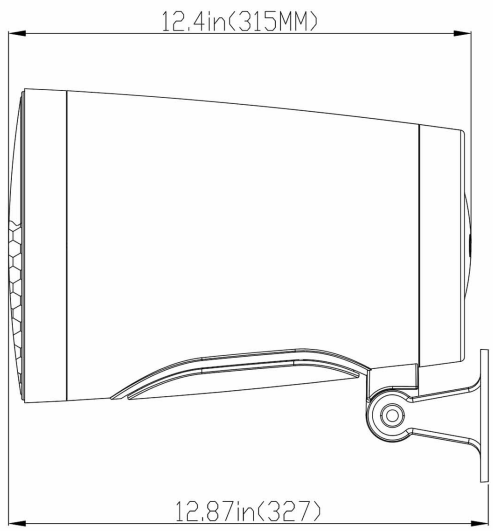
- Product Dimensions:
  – 8.1” x 11.5” x 10.4”
  – 205.7mm x 292mm x 264.2mm
- 10.5 lbs (4.75 kg)