User Manual

DNAKE S213M

REMARK

Please follow the user manual for correct installation and testing. If there is any doubt please call our tech-supporting and customer center.

Our company applies ourselves to reformation and innovation of our products. No extra notice for any change. The illustration shown here is only for reference. If there is any difference, please take the actual product as the standard.

The product and batteries must be handled separately from household waste. When the product reaches the end of service life and needs to be discarded, please contact the local administrative department and put it in the designated collection points in order to avoid the damage to the environment and human health caused by any disposal. We encourage recycling and reusing the material resources.

CATALOG

PRODUCT FEATURE 1

TECHNICAL PARAMETER 1

PACKAGE CONTENT 2

OVERVIEW 3

BASIC OPERATION 5

WEB SETTING 7

SYSTEM DIAGRAM 18

DEVICE WIRING 19

INSTALLATION 21

TROUBLESHOOTING 25

SAFETY INSTRUCTION.....26

PRODUCT FEATURE

1. Powered by PoE or power adapter (DC12V/2A)
2. Support IC (13.56MHz) & ID (125kHz) card, NFC
3. 3 Indicator Lights
4. 2 relays supported
5. Tamper alarm
6. Multi-button supported (2 or 5 buttons optional)

TECHNICAL PARAMETER

Power Supply: PoE (802.3af) or DC 12V/2A

Standby Power: 1.5 W

Rated Power: 3.5 W

Resolution: 1280 x 720

Working Temperature: -40℃ to +55℃

Storage Temperature: -40℃ to +70℃

Working Humidity: 10% to 90% (non-condensing)

PACKAGE CONTENT

MODEL: S213M (Surface Mounting)

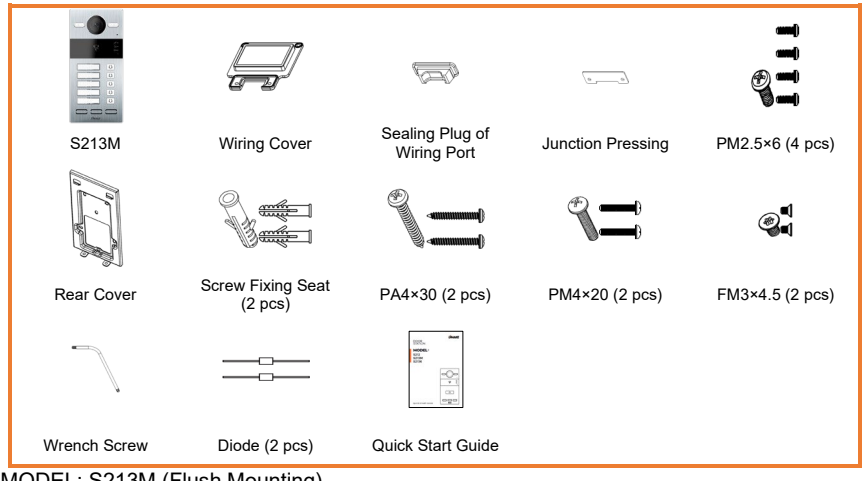

MODEL: S213M (Flush Mounting)

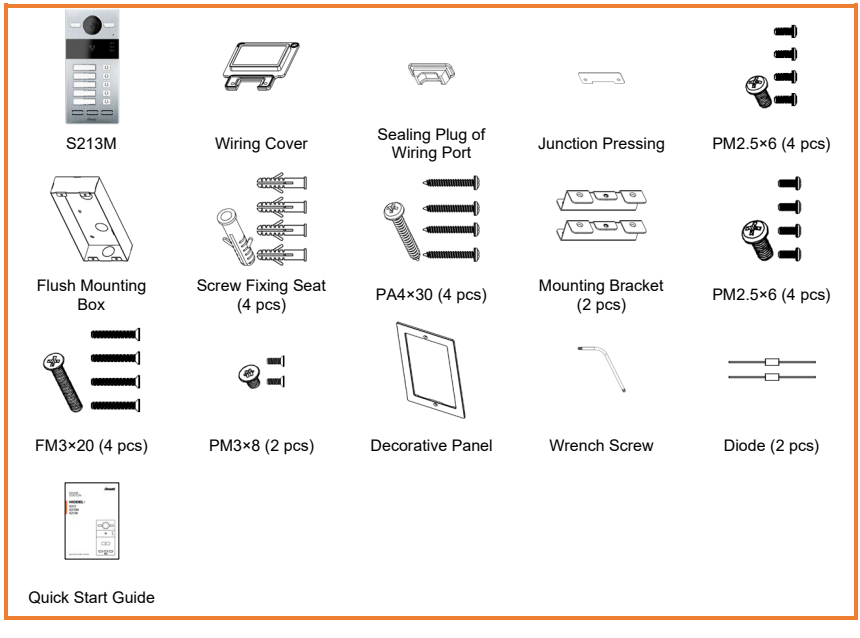

OVERVIEW

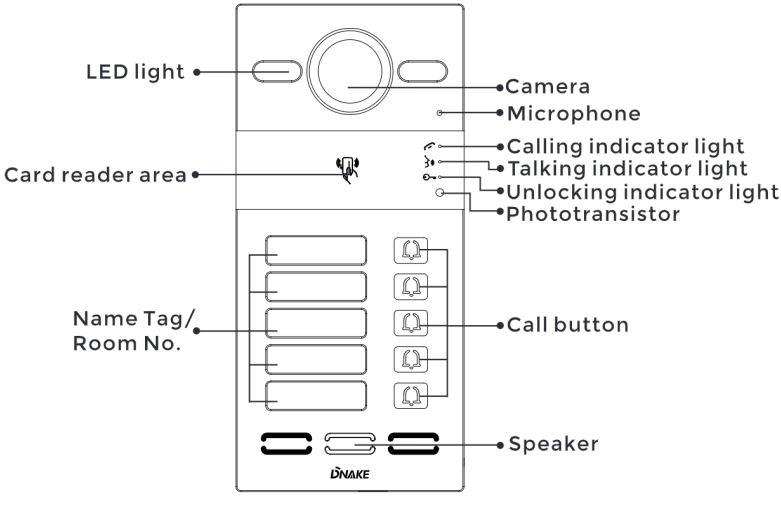
LED light
Camera
Microphone
Calling indicator light
Card reader area
Talking indicator light
Unlocking indicator light
Phototransistor
Name Tag/
Room No.
Call button
Speaker
DNAKE

S213M Overview

Note:

Calling indicator light: The 1st indicator light will activate if the call button is pressed.

Talking indicator light: The 2nd indicator light will activate if the call is picked up or the Door Station is being actively monitored.

Unlocking indicator light: The 3rd indicator light activates for 3 seconds when the door is unlocked.

Relay Outputs: Supports 2 relay outputs.

BASIC OPERATION

1. Call and Monitor

1.1. Call Indoor Monitor

In standby mode, press button on Villa Station to call Indoor Monitor. Each button on Door Station is related to the fixed room number as shown in the picture below. During the call, press button on Villa Station again to end the call. If the call fails or Indoor Monitor is busy, Villa Station will make a beep sound.

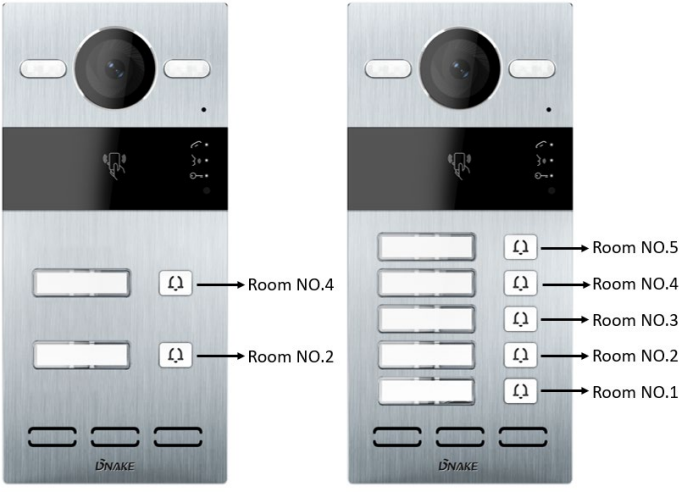

1.2. Monitor Villa Station

Click Doors icon on Indoor Monitor's homepage to monitor Villa Station.

2. Add Cards by Admin Card

2.1. Add other cards

Step 1: Tap the admin card once;

Step 2: And then tap other cards immediately. Other cards you have tapped can be used to open the door;

Step 3: Tap the admin card again to finish.

2.2. Delete other cards one by one

Step 1: Tap the admin card twice;

Step 2: And then tap other cards immediately. Other cards you have tapped will be deleted;

Step 3: Tap the admin card again to finish.

2.3. Delete all other cards

Tap the admin card five times. All the other cards will be deleted.

Tips: The admin card can only be used to manage cards. It cannot be used to open the door.

WEB SETTING

Connect Door Station and PC to a network switch in the same LAN. You can enter the IP address of Door Station in the web browser search bar and log in with the default account (admin) and password (123456). This is where you can configure the device.

To get the IP address, you can search by DNAKE Remote Upgrade Tool installed in the same LAN with the devices.

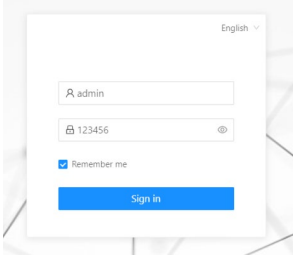

1. General

1.1. General > Information

When you first log in to the web interface, you can find basic information displayed in this dashboard.

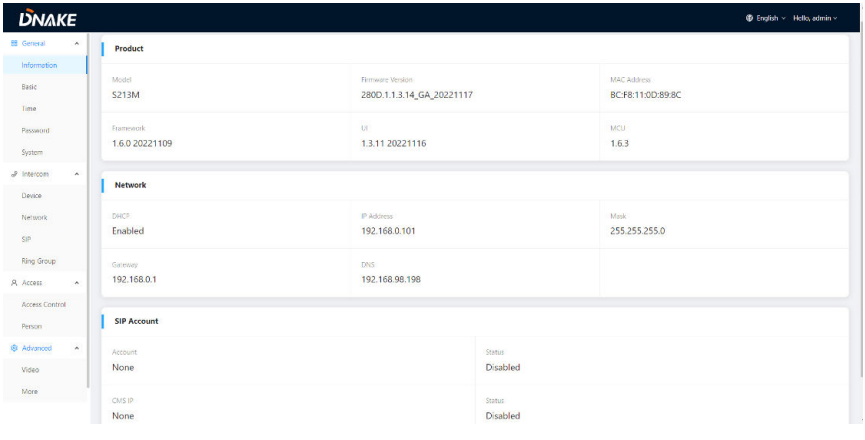

Model:	Model of the device;
Firmware Version:	Firmware version of the device;
MAC Address:	MAC address of the device;
Framework:	Framework of the device;
UI:	UI of the device;
MCU:	MCU of the device;
DHCP:	Status of DHCP;
IP Address:	Current IP address of the device;
Mask:	Subnet mask of the device;
Gateway:	Gateway of the device;
DNS:	Domain Name Server of the device;
Account:	SIP account of the device;
Status:	Status of SIP registration of the device;
CMS IP:	IP address of CMS;
Status:	Status of CMS registration;

1.2. General > Basic

Language, resolution and volume of the device can be configured in this column.

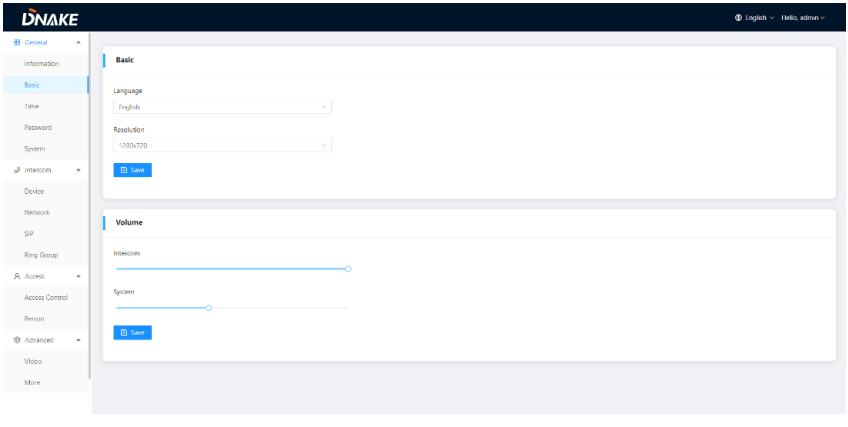

Language:	16 languages supported (简体中文, English, 繁體中文, עִבְרִית, Deutsch, Español, Türk, Tiếng Việt, Nederlands, Português, Polski, Русский, عربي, Français, Italiano, slovenský);
Resolution:	3 resolutions supported (320 × 240, 640 × 480, 1280 × 720);
Intercom:	Volume of Intercom can be set from 1 to 6;
System:	Volume of System can be set from 1 to 6;

1.3. General > Time

Time of the device can be configured. Daylight Saving Time is also supported.

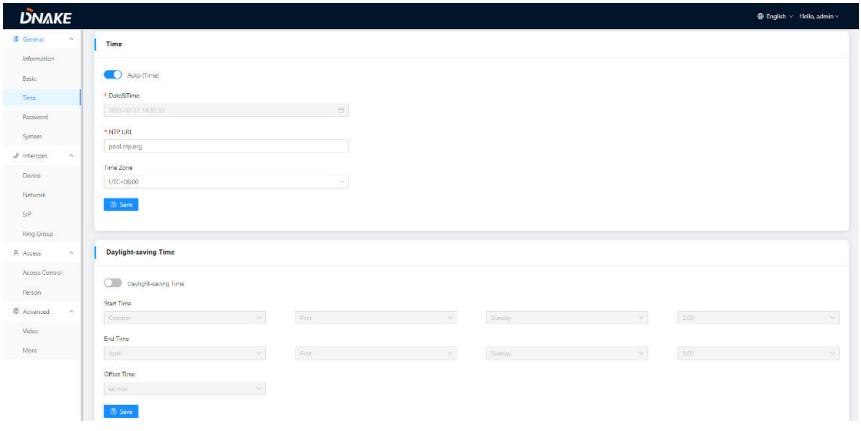

Auto (Time):	Enable to synchronize computer time;
Date&Time:	Date and time can be set manually;
NTP URL:	Network Time Protocol (NTP) is a protocol used to synchronize computer time;
Time Zone:	A region that observes a uniform standard time;
Daylight-saving Time:	Enable to set DST;
Start Time:	The beginning of DST;
End Time:	The ending of DST;
Offset Time:	The default value is 60 minutes;

1.4. General > Password

The Web password is for the administrator to log in settings on the web. The default password is 123456.

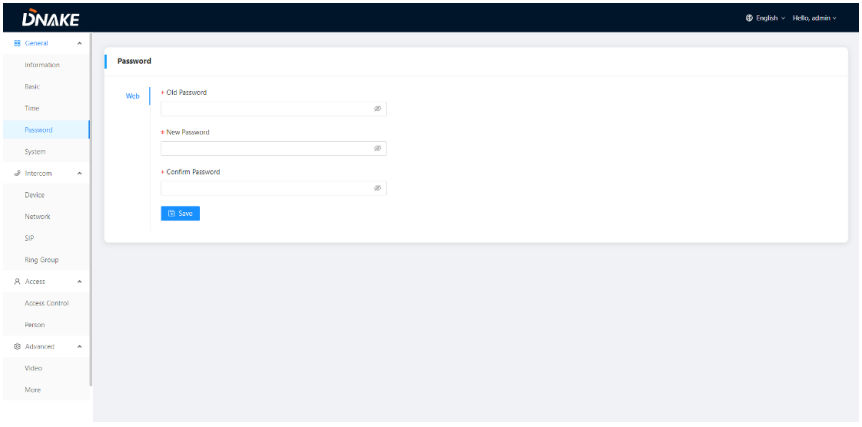

Web Old Password:	Current administrator password of the web (Default 123456);
Web New Password:	New administrator password of the web;
Web Confirm Password:	Confirm administrator password of the web;

1.5. General > System

The system column is designed for data backup and restore, firmware upgrade, factory default, device reboot, packet capture, logs capture, and obtaining UI screenshots.

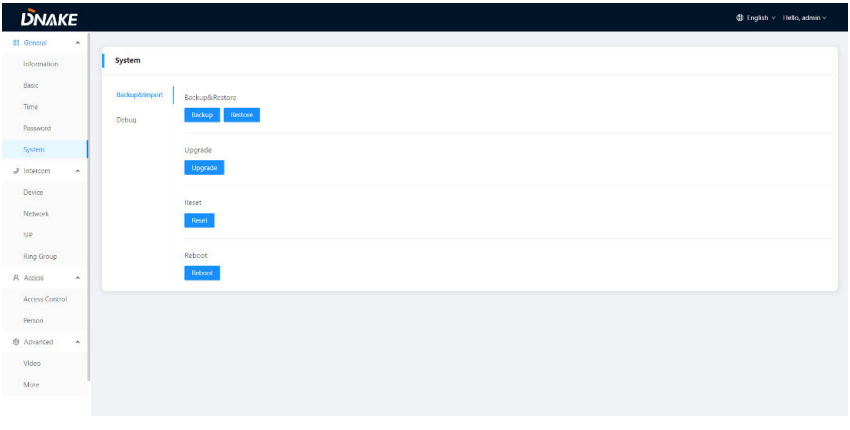

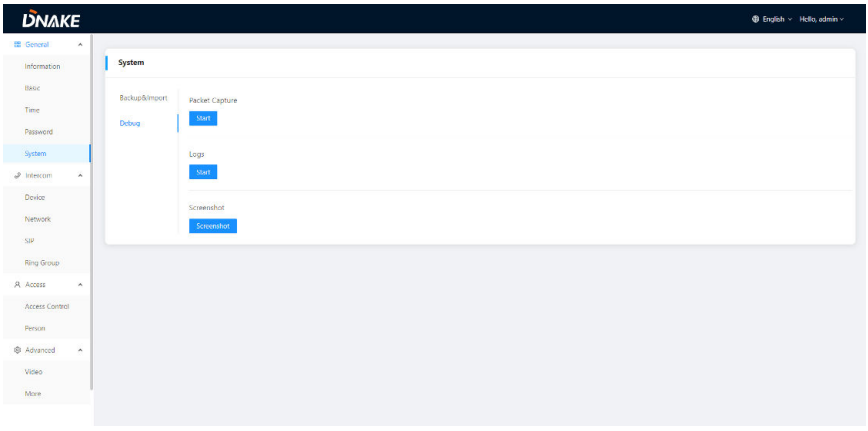

Backup&Restore:	Backup all setting and restore settings;
Upgrade:	Upgrade equipment;
Reset:	Reset to factory settings;
Reboot:	Reboot the device;
Packet Capture:	Capturing packets can help developers reproduce positioning problems;
Logs:	Device logs;
Screenshot:	Screenshot device interface;

2. Intercom

2.1. Intercom > Device

Numbers here are basic settings for making a call to Indoor Monitor. For Door Station, the building and unit number should be the same as those in Indoor Monitor. For Villa Station with one button, the building, unit, and room number should be the same as those in Indoor Monitor.

The device number here is to distinguish different Door Stations when more than one Door Station is in one building.

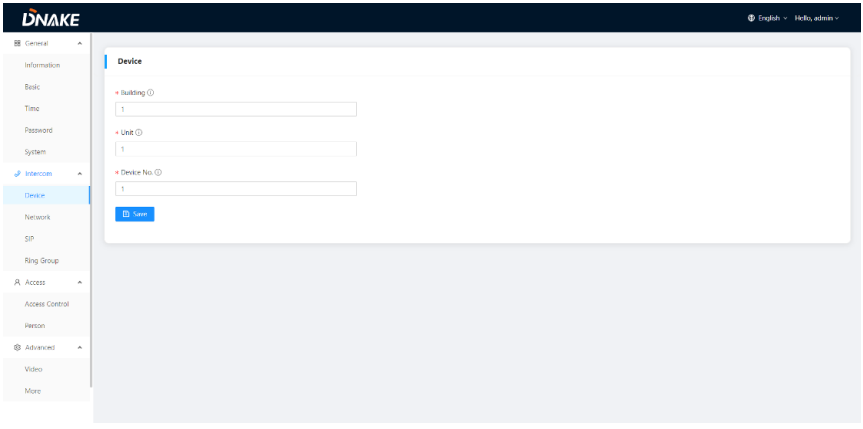

Building:	Number of the building (Range: 1-999);
Unit:	Number of the unit (Range: 1-99);
Device No:	Number of the device (Range: 1-9);

2.2. Intercom > Network

The device network can be set to either DHCP or a static IP address. CMS parameters should be configured here when you try to register this device to CMS.

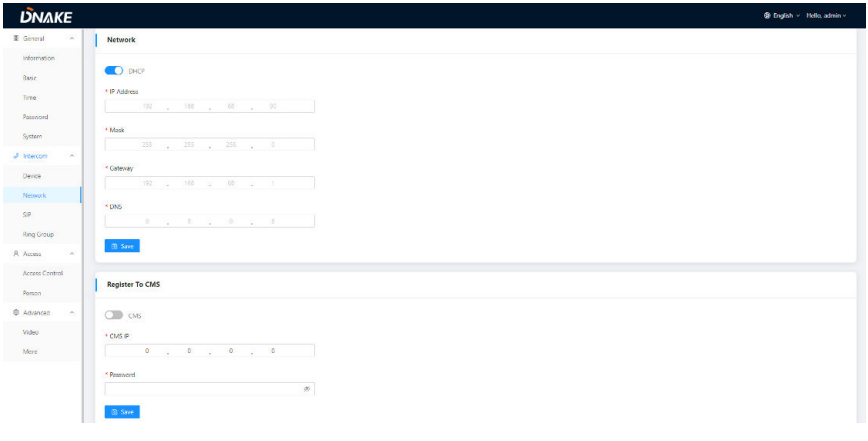

DHCP:	Enable DHCP (Dynamic Host Configuration Protocol) to dynamically distribute network configuration parameters;
IP Address:	Configure Static IP address to manually distribute network configuration parameters;
Mask:	Subnet mask;
Gateway:	A component that is part of two networks, which use different protocols;
DNS:	Domain Name Server of the device;
CMS:	Enable to use CMS software to manage devices;
CMS IP:	Server address of CMS;
Password:	Password you set for this device's CMS registration;

2.3. Intercom > SIP

The SIP column concerns SIP registration, Display Name, Register Name, Username, Password, SIP Server Host, Outbound Proxy, Transfer Protocol, Video Payload, etc.

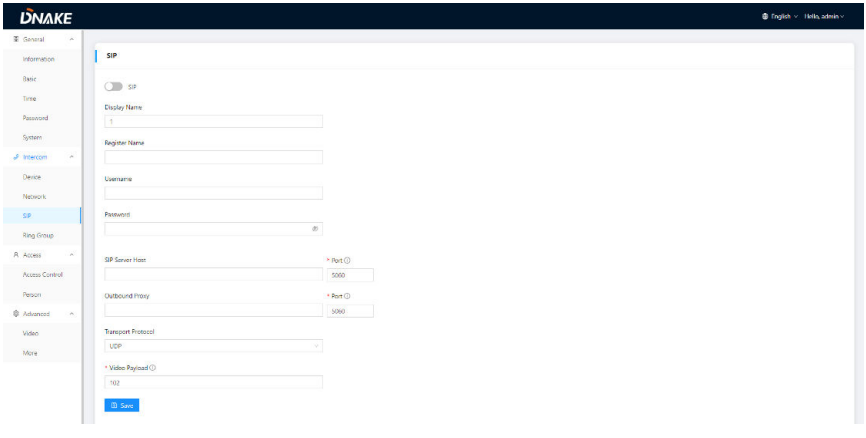

SIP:	Enable to use SIP;
Display Name:	Display name of SIP;
Register Name:	Register Name of SIP;
Username:	Username of SIP;
Password:	Password of SIP;
SIP Server Host:	SIP Server Host of SIP; the default port is 5060;
Outbound Proxy:	Outbound Proxy of SIP; the default port is 5060;

Transfer Protocol:	Transfer Protocol (UDP, TCP, TLS);
Video Payload:	Video payload range is 96-127;

2.4. Intercom > Ring Group

Ring group is for setting up SIP calls or call mode. The length of the call and ring time can also be configured here.

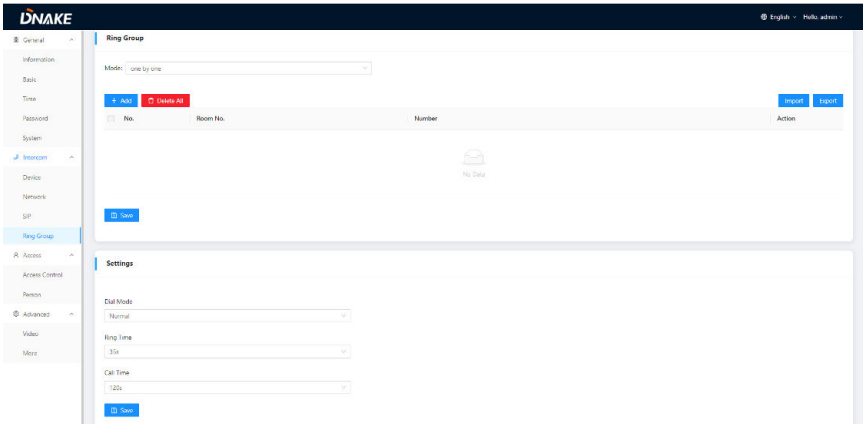

Mode:	2 modes supported (one by one, all at once);
Dial Mode:	2 dial modes supported (Normal, Repeat);
Ring Time:	The ring will be ended automatically after a period of time (10s, 20s, 35s, 45s, 60s, 90s, 120s)
Call Time:	The call will be ended automatically after a period of time (120s, 300s, 600s, 1200s, 1800s);

3. Access

3.1. Access > Access Control

Relays and access cards can be configured here.

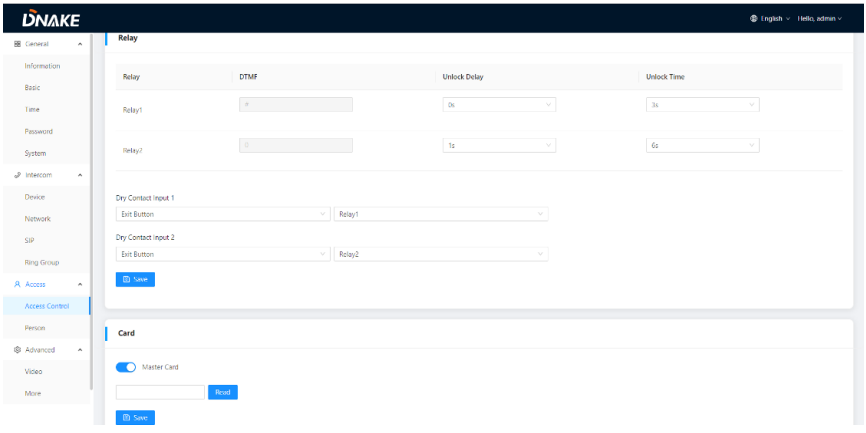

Relay 1-2:	2 relays supported;
DTMF:	Dual-tone multi-frequency signaling (Relay1: #, Relay2:0, relay3: *);
Unlock Delay:	The length of unlock delay time (1-9s);
Unlock Time:	The length of unlock time (1-9s);
Dry Contact Input 1-2:	3 modes of dry contact inputs are supported (Exit Button, Door Sensor, Fire Linkage);
Master Card:	Click read to add Master card to manage cards;

3.2. Access > Person

Person column is for access authorization.

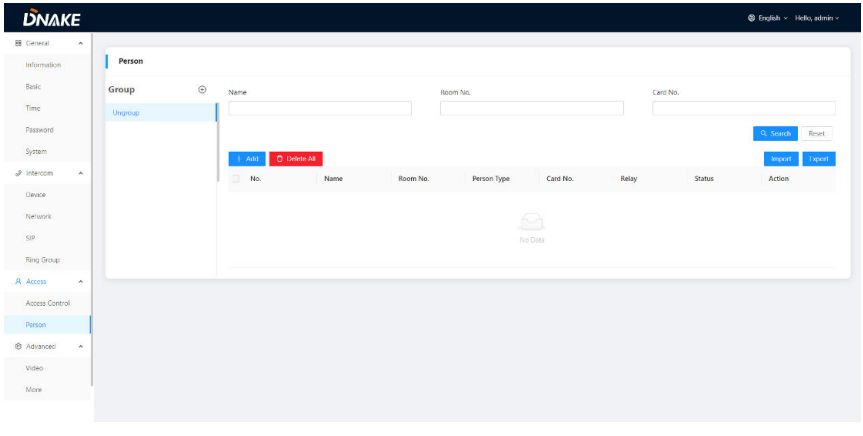

Search:	Fill in text inputs to search;
Reset:	Click reset to clear words in text inputs;
Add:	Add users to Door Station;
Delete All:	Delete all data on the chart;
Export:	Export all data on the chart;

4. Advanced

4.1. Advanced > Video

Real-time video from IP cameras can be obtained by filling in its URL (RTSP). On the talking interface of Indoor Monitor, you can click the little keyboard icon to switch to IP cameras' video. (No.1 on the keyboard stands for Door Station while No.2 to No.5 stands for IP camera)

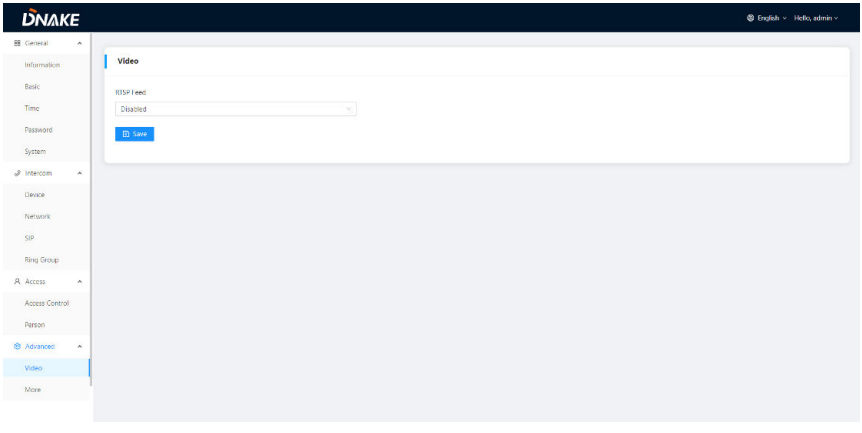

RTSP Feed:	4 IP cameras supported to switch while talking on Indoor Monitor;
URL:	IP camera's URL;

4.2. Advanced > More

More column is for Tamper Alarm and ONU Penetration.

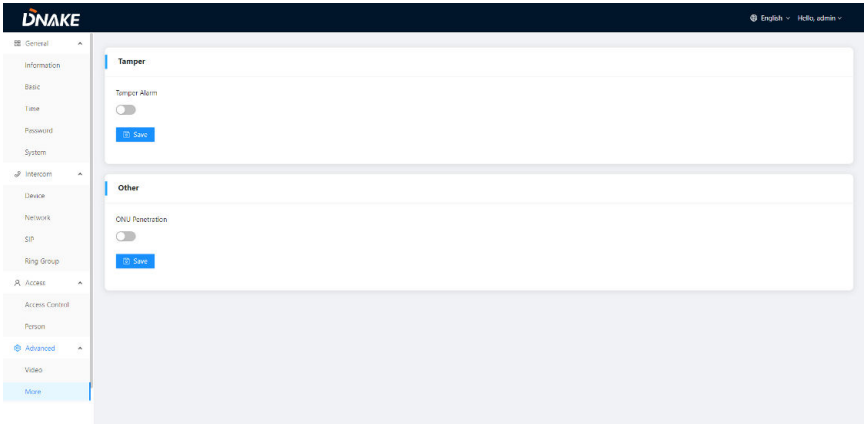

Tamper Alarm:	Enable to use Tamper alarm;
ONU Penetration:	Enable to prevent ONU from banning multicast;

SYSTEM DIAGRAM

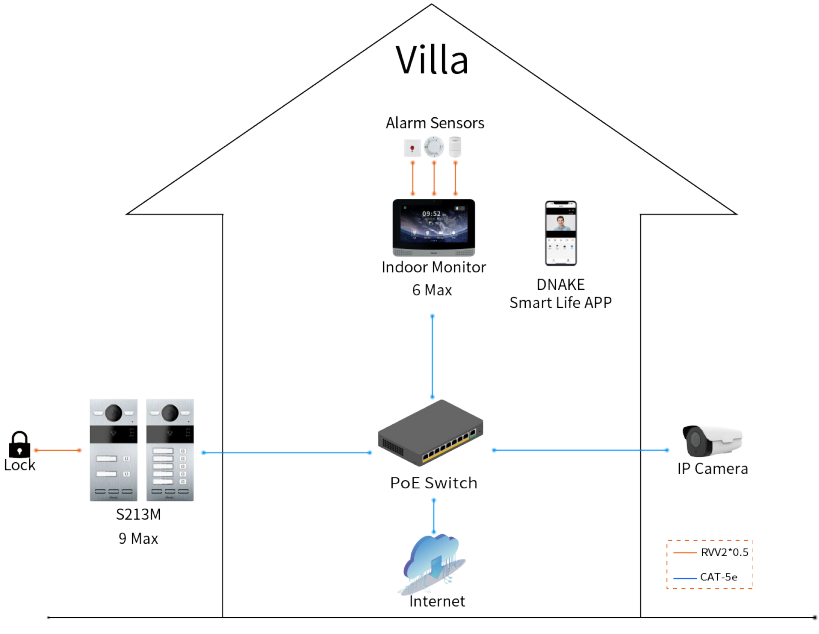

DEVICE WIRING

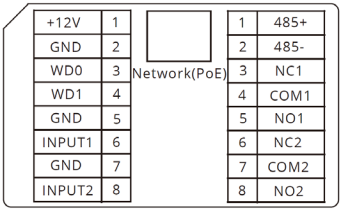

1. Network (PoE)

Standard RJ45 interface used to connect to the Master Station, Indoor Monitor and/or other network equipment via network switch.

PSE shall comply with IEEE 802.3at (PoE+) and its output power not less than 30W and its output voltage not less than 50V.

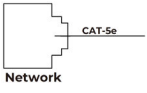

2. Power

The power interface of Door Station connects to 12V DC power.

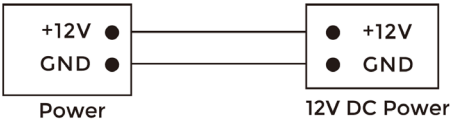

3. Exit/Door-detector/Fire Fighting Linkage

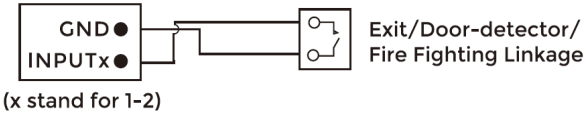

4. RS485/Switching Value Output

Enable to connect equipment with RS485 interface.

Connect to the lock module (an independent power supply is necessary for the lock).

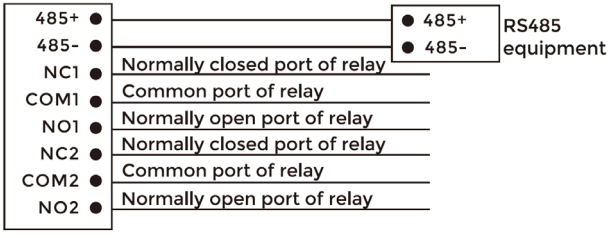

RS485/Switching Value Output

⚠ Warning!

1. When connecting to an inductive load device such as a relay or electromagnetic lock, you are recommended to use a diode 1A/400V (included in the accessories) in anti-parallel with the load device to absorb inductive load voltage peaks. The intercom will be better protected in this way.
2. The load current of the relay cannot be greater than 2A. See attached picture for more details.

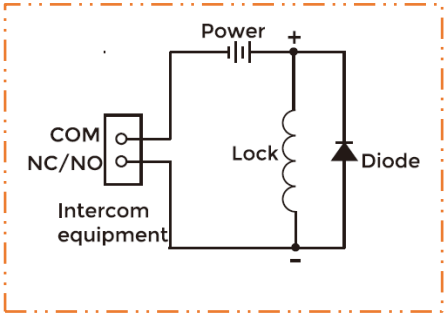

5. Card Reader Interface

The interface can be connected to one IC/ID card reader or be used for reading the information of built-in card reader.

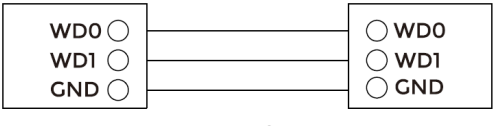

Card Reader Interface IC/ID Card Reader or Management Device

Note: Door Station can only be connected to one card reader or management device at a time.

Installation of Wiring Cover

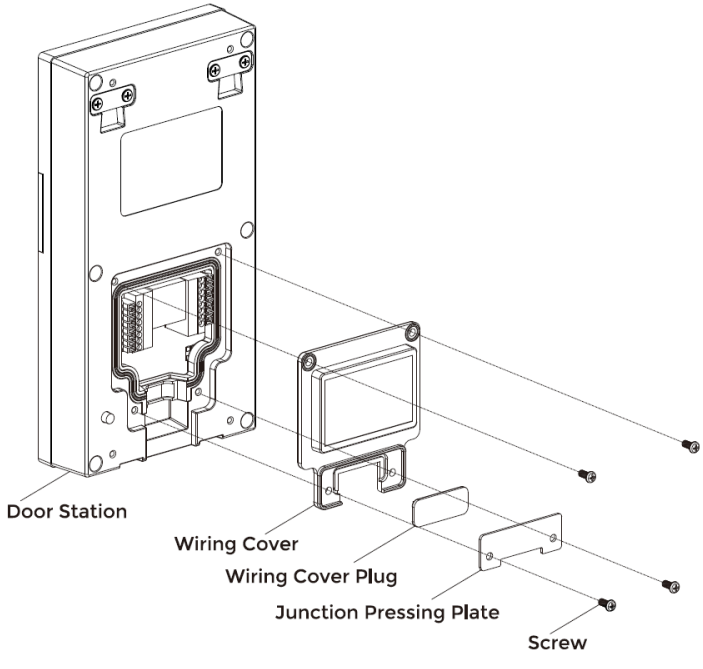

Surface Mounting-86 Mounting Box

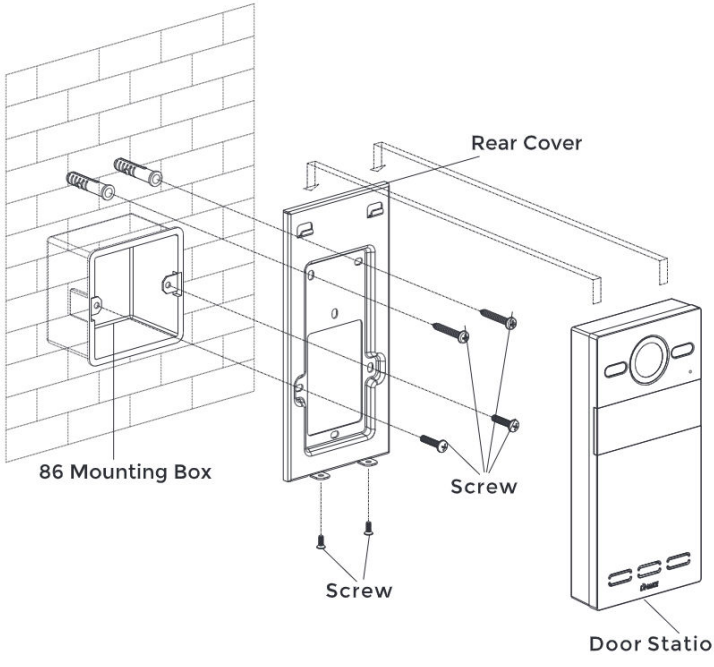

Product size: 88 × 188 × 32.5 mm
Surface Mounting size: 88 × 188 × 34 mm

Surface Mounting-118 Mounting Box

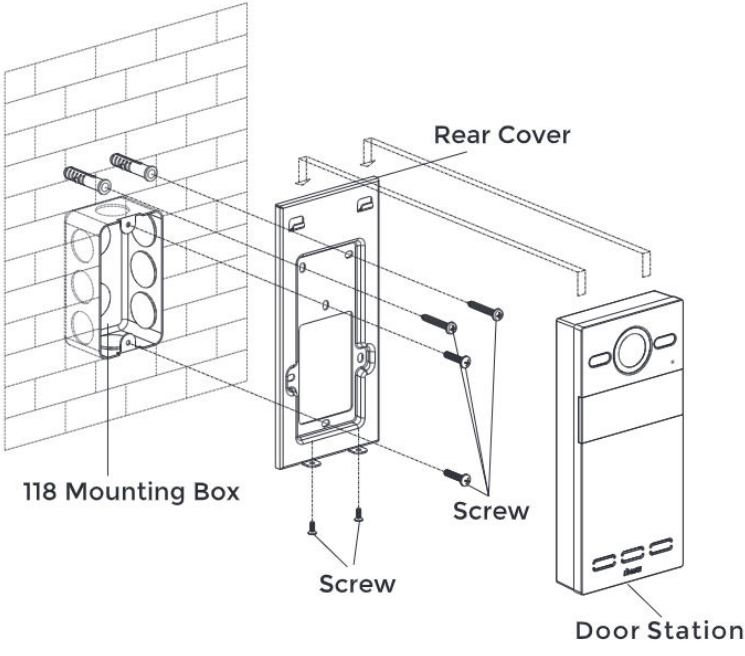

Product size: 88 × 188 × 32.5 mm
Surface Mounting size: 88 × 188 × 34 mm

Flush Mounting

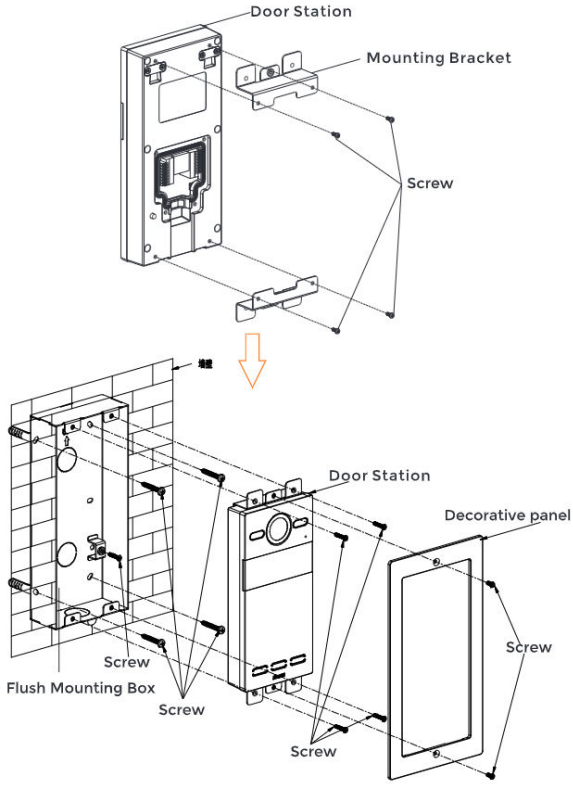

Product size:	88 × 188 × 32.5 mm
Flush Mounting size:	120 × 230 × 48 mm
Hole-cutting size:	98 × 219 × 42 mm

Tips:

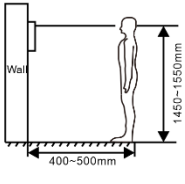

The camera should be 1450~1550mm above the ground.

The camera at this height can capture human face perfectly.

TROUBLESHOOTING

The Indoor Monitor cannot start up or power off automatically.

- Check whether it has power-failure, and power it on again

The Indoor Monitor display screen is too dim.

- Check whether the brightness and contrast settings of screen are correct.

No sound during the communication.

- Check whether the Indoor Monitor is set as mute mode, or the volume is set to the lowest.

The Indoor Monitor cannot monitor the Door Station.

- Other user is using the system, so you can use it once he/she finished the operation.

Multimedia files cannot be played normally.

- Check whether the system supports the file format. Please refer to the multimedia setting for details.

No response when clicking Indoor Monitor display screen.

- Press "Unlock" button for 5s, or slowly slide horizontally or vertically on the LCD to make touchscreen calibration. It needs to be calibrated.

Touchscreen responses slowly or cannot make calibration.

- Take down any protective paster, since it may affect identification
- and input for device;
- Ensure the finger is dry and clean when clicking touchscreen;
- Restart the device to clear any temporary software error.

The temperature of device is too high.

- Long-term use leads to high temperature. It’s normal and will not affect the device’s use life and performance.

SAFETY INSTRUCTION

In order to protect you and others from harm or your device from damage, please read the following information before using the device.

- Do not install the device in the following places:
- Do not install the device in high-temperature and moist environment or the area close to magnetic field, such as the electric generator, transformer or magnet.
- Do not place the device near the heating products such as electric heater or the fluid container.
- Do not place the device in the sun or near the heat source, which might cause discoloration or deformation of the device.
- Do not install the device in an unstable position to avoid the property losses or personal injury caused by the falling of device.

Guard against electric shock, fire and explosion:

- Do not use damaged power cord, plug or loose outlet.
- Do not touch the power cord with wet hand or unplug the power cord by pulling.
- Do not bend or damage the power cord.
- Do not touch the device with wet hand.
- Do not make the power supply slip or cause the impact.
- Do not use the power supply without the manufacturer's approval.
- Do not have the liquids such as water go into the device.

Clean Device Surface

- Clean the device surfaces with soft cloth dipped in some water, and then rub the surface with dry cloth.

Other Tips

- In order to prevent damage to the paint layer or the case, please do not expose the device to chemical products, such as the diluent, gasoline, alcohol, insect-resist agents, opacifying agent and insecticide.
- Do not knock on the device with hard objects.
- Do not press the screen surface. Overexertion might cause flopover or damage to the device.
- Please be careful when standing up from the area under the device.
- Do not disassemble, repair or modify the device at your own discretion.
- The arbitrary modification is not covered under warranty. When any repair required, please contact the customer service center.
- If there is abnormal sound, smell or fume in the device, please unplug the power cord immediately and contact the customer service center.
- When the device isn’t used for a long time, the adaptor and memory card can be removed and placed in dry environment.
- When moving, please hand over the manual to new tenant for proper usage of the device.

V1.2

EASY & SMART INTERCOM SOLUTIONS

DNAKE