NEXUS 21

TECHNOLOGY IN MOTION

Installation Manual for L-65 HTG

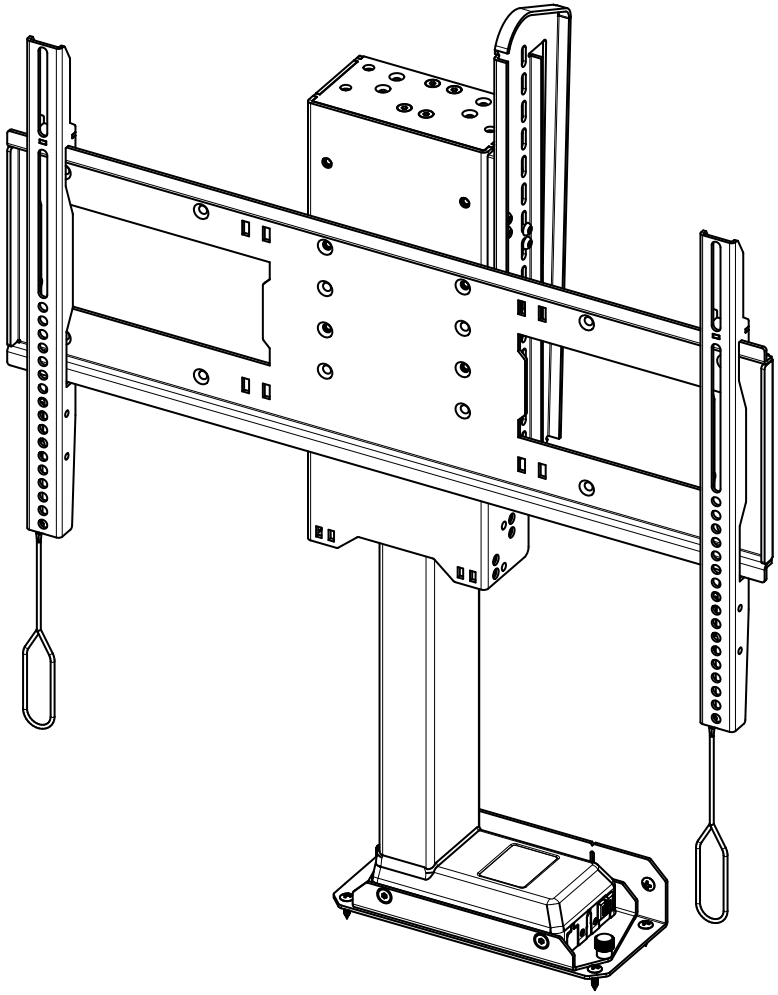

Table of Contents

Safety Information	**Page 3**
Parts & Hardware List	**Page 4**
Warranty & Return Policies	**Page 6**
Assembly & Installation	**Page 8**
Connecting the Lift System	**Page 13**
Assembly & Installation Continued	**Page 16**
TV Mounting	**Page 21**
Lid Testing	**Page 26**

Safety Information

WARNINGS:

1. Do not use this product for any application other than those specified by Nexus 21.
2. Do not exceed the weight capacity. This can result in serious personal injury or damage to the equipment. It is the installer's responsibility to ensure that the total combined weight of all attached components does not exceed that of the maximum figure stated.
3. Follow all technical specifications and instructions during the installation.
4. Only use attachments/accessories specified by the manufacturer.
5. Close supervision is necessary when this system is being used by, or near, children, or disabled persons.
6. It is the responsibility of the installer to warn all potential users of the dangers of interfering with the mechanism during operation.
7. Read all technical instructions fully before installation and use. It is the installer's responsibility to ensure that all documentation is passed on to the users and read fully before operation.
8. Failure to provide adequate structural strengthening, prior to installation can result in serious personal injury or damage to the equipment.
9. Risk of electric shock. Do not attempt to open the Control Box.
10. To reduce risk of fire or electric shock, do not expose parts to rain or other liquids.
11. Protect the power cord from being walked on or pinched.
12. Keep all documentation.
13. Heed all warnings.
14. Clean only with a dry cloth.
15. Refer all service questions to Nexus 21 if the system does not operate normally.

Safety Notice: *Avoid contact with the TV and Lift System during operation. The lid of your enclosure must be installed as described in the instructions, using the Hinged Top Guides. Installing the enclosure lid in any other fashion will create hazardous pinch points that can cause serious personal injury. Do not, under any circumstances, allow any person or pet to position themselves under the TV at any time.*

Disclaimer: *Nexus 21 disclaims any liability for modifications, improper installations, or installations over the specified weight range. Nexus 21 will not be liable for any damages arising out of the use of, or inability to use, Nexus 21 products. Nexus 21 bears no responsibility for incidental or consequential damages. This includes, but is not limited to, any labor charges for the servicing of Nexus 21 products performed by anyone other than Nexus 21. Nexus 21 intends to make this and all documentation as accurate as possible. However, Nexus 21 makes no claim that the information contained herein covers all details, conditions or variations, nor does it provide for every possible contingency in connection with the installation or use of this product. The information contained in this document is subject to change without prior notice or obligation of any kind. Nexus 21 makes no representation of warranty, expressed or implied, regarding the information contained herein. Nexus 21 assumes no responsibility for accuracy, completeness or sufficiency of the information contained in this document.*

Parts List

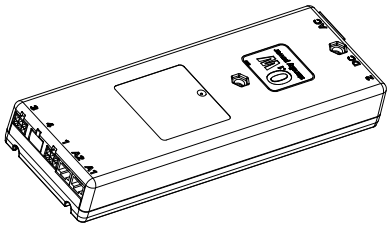

Control Box

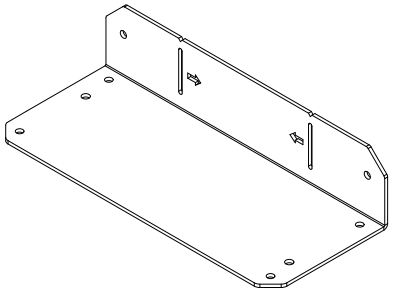

Base Mount

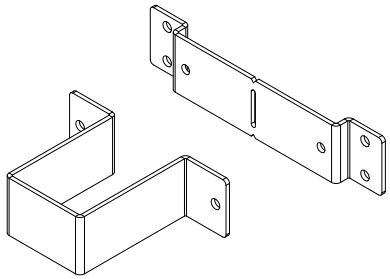

Column Clamp Base &

Column Clamp Extension

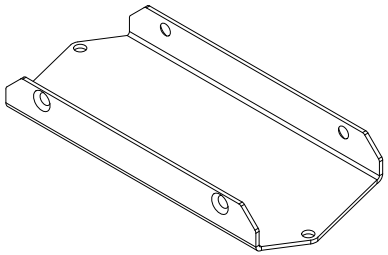

Lift Column Mount

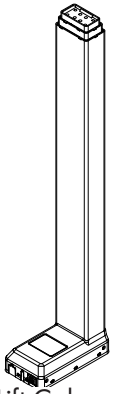

Lift Column

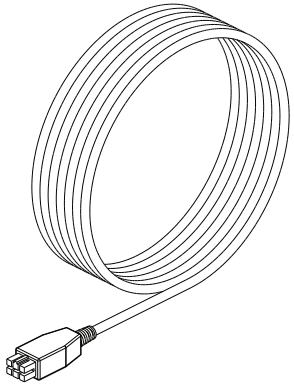

Motor Cable

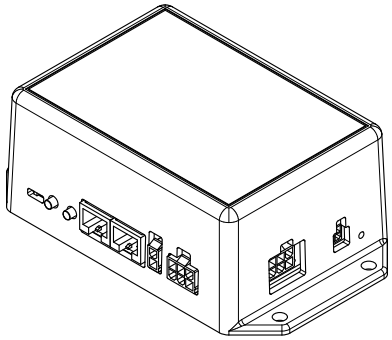

Universal Control Hub

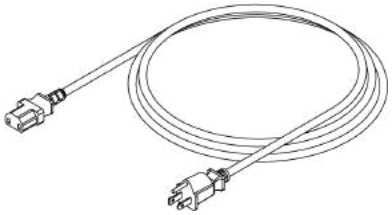

Power Cable

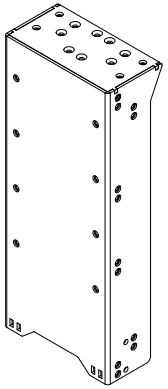

Screen Support

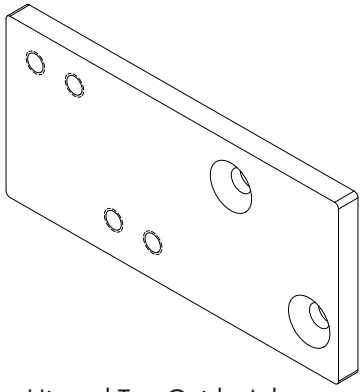

Hinged Top Guide Adapter

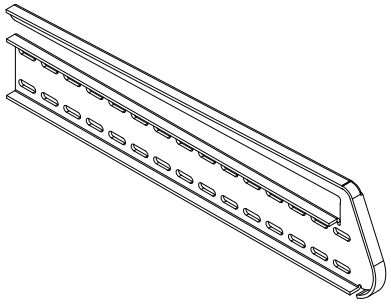

Hinged Top Guide

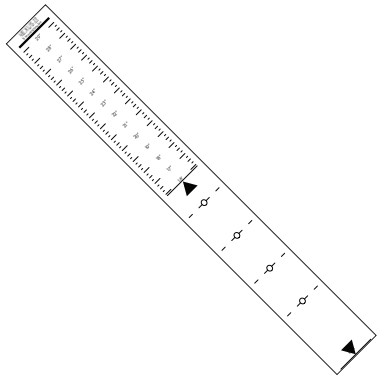

TV Mounting Template

Parts List Continued

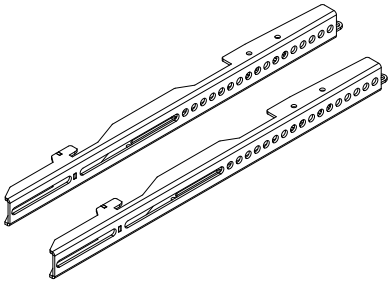

(2) Vertical Mounting Bar

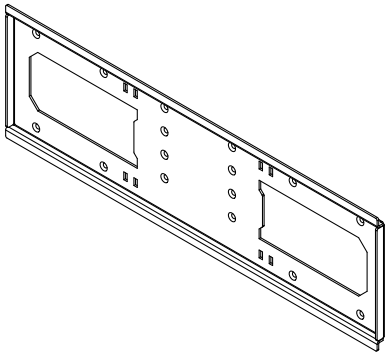

Screen Backplate

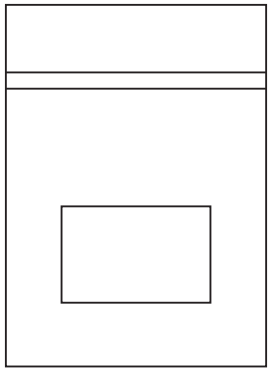

Hardware Pack

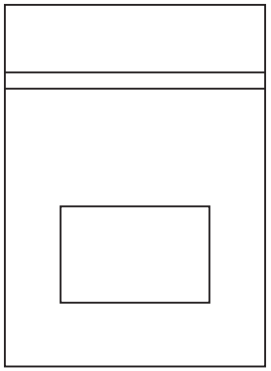

Control Kit

Hardware Pack Contains:

(10) - #8 x 3/4 FHWS
(2) - #10 x 1-3/4 FHWS
(10) - #10 x 3/4 THWS
(4) - M6 x 8 BHMS

(8) - M6 x 12 BHMS
(14) - M6 x 12 FHMS
(4) - M6 x 16 FHMS
(4) - M6 Thumb Screws

(1) - Hinge Top Guide Hardware Pack
(1) - M4 Small Hex Key
(4) - Lid Corner Catches
(1) - 11″ Hook and Loop Strip

(4) - Snakeskin Ties
(4) - Plastic Ties
(4) - Wire Clips
(1) - Large Assorted Hardware Pack*

*Large Assorted TV Hardware accommodates most TV's but additional hardware may be necessary to mount certain TV's.

10-Year Full Replacement Warranty

Nexus 21 products are manufactured to the highest standards of quality and we are proud to provide the industry's longest, most comprehensive warranty: 10 years of full-replacement coverage.*

Nexus 21's dedicated product-support specialists are ready to assist you with any questions. We ask that our specialists be consulted before any repairs or modifications are attempted, as these may void the product warranty.

How It Works:

Step 1:
If you experience any problem with a Nexus 21 system, call our Product-Support Team at 1-480-306-5462.

Step 2:
We'll guide you through some of our basic troubleshooting procedures to help identify any issues. The majority of reported issues are resolved with us on the first call without a need for replacement parts or systems.

Step 3:
In the event that you do need a replacement part or system, we'll ship it to you right away, along with a prepaid UPS return shipping label and a package for the defective part or system to be returned to our office. Nexus 21 will cover the shipping cost of the replacement part or system within the continental United States and Canada (excludes Hawaii, Alaska and Puerto Rico). Shipping costs for replacement parts or systems shipped internationally will be covered up to a value of $50. Any additional shipping costs, including applicable duties and taxes, are the responsibility of the customer or receiving party.

The Details:

Nexus 21 warrants all systems to be free from defects in material and workmanship from the date of purchase until the end of the coverage period (shown below). The warranty includes all parts, motorized components, electronics and metal parts. If a Nexus 21 system or part proves to be defective in material or workmanship during the expressed warranty period, Nexus 21 will replace it free of charge. If the exact original purchase product is not available (due to upgraded designs or discontinuation of a model), the defective product will be replaced with a similar product of equal or greater value. The replacement will then be covered by the balance of the time remaining on the customer's original warranty. A Nexus 21 product-support representative will determine whether a part or an entire system should be replaced.

***Coverage periods for the warranty are as follows:**

Residental and Hotel Use

- All Nexus 21 motorized products (except Apex): 10 years
- Apex Motorized Wall Mount: 5 years

Commercial and Educational Use

- All Nexus 21 motorized products (except Apex): 5 years
- Apex Motorized Wall Mount: 3 years

The Nexus 21 full-replacement warranty does NOT cover: any product on which the serial number has been defaced, modified or removed; damage, deterioration or malfunction resulting from accident, misuse, neglect, power surges, fire, water, lightning or other acts of nature; unauthorized product modification; failure to follow manufacturer's recommended installation instructions supplied with the Nexus 21 system; repair or attempted repair by anyone not authorized by Nexus 21; causes external to the product such as electric power fluctuations or failure; use of supplies or parts not meeting Nexus 21 specifications or any other cause which does not relate to a product defect.

PLEASE NOTE: In order for any warranty claim to be covered fully under the outlined policy we will require the name, company name or contact information for the original purchaser of the product to qualify the claim. If the information requested cannot be supplied to us or located on file, replacement parts or systems may not be covered under warranty.

Return Policy

Within 30 Days of Delivery:

Customers may return a Nexus 21 product(s) for any reason within 30 days of the date it is received for a full refund of the purchase price. Shipping charges associated with your order are not eligible for refund. To initiate a product-return request, please review the following conditions:

- The product must be unused and complete. Full or partial assembly of the product may void eligibility for return.
- The product must be returned in its original packaging to ensure it is not damaged during shipping.
- Customers must call Nexus 21 and speak with a representative to initiate a return request.
- All returns are subject to an inspection process by a member of Nexus 21 Product Support before a refund is issued.
- Please allow a minimum of 2 weeks from the date the return is received for a refund to be processed.
- Any Nexus 21 product that is received back and deemed unfit for resale or restock upon inspection due to installation or shipping damage will not be eligible for a full refund.
- Customers are responsible for shipping charges to send the product back to us.
- All returns must be processed back to the original form of payment used in the purchase of the item(s).

Nexus 21 ships each product encased in custom die-cut foam, which is purpose-engineered for vibration dampening to reduce any risks of shipping damage. It is mandated that all product returns be shipped back to Nexus 21 in their original packaging. If you do not have the original packaging, please contact Nexus 21 Product Support at 1-480-306-5462. A new set of packaging materials can be requested and the cost will be deducted from the refund amount.

After 30 Days

Returns received 30-60 days after the product has been delivered are not eligible for a full refund of the purchase price. All returns accepted back during this time frame will be subject to a **restocking fee of 25% of the original purchase price.** The following conditions apply to any returns received within this stated timeframe:

- The product must be unused and complete. Full or partial assembly of the product may void eligibility for return.
- The product must be returned in its original packaging to ensure it is not damaged during shipping.
- Customers must call Nexus 21 and speak with a representative to initiate a return request.
- All returns are subject to an inspection process by a member of Nexus 21 Product Support before a refund is issued.
- Please allow a minimum of 2 weeks from the date the return is received for a refund to be processed.
- Any Nexus 21 product that is received back and deemed unfit for resale or restock upon inspection due to installation or shipping damage will not be eligible for a full refund.
- Customers are responsible for shipping charges to send the product back to us.
- All returns must be processed back to the original form of payment used in the purchase of the item(s).

Nexus 21 ships each product encased in custom die-cut foam, which is purpose-engineered for vibration dampening to reduce any risks of shipping damage. It is mandated that all product returns be shipped back to Nexus 21 in their original packaging. If you do not have the original packaging, please contact Nexus 21 Product Support at 1-480-306-5462. A new set of packaging materials can be requested and the cost will be deducted from the refund amount.

Nexus 21 will not accept return requests past 60 days of the product being delivered.

To initiate a Return follow the steps listed below:

Step 1: Call 1-888-981-9919 and request to return your product(s).

Step 2: Your Account Manager will provide you with a link to a form for you to fill out digitally.

Step 3: Arrange shipment of the product to our office. Emailing the tracking information to support@nexus21.com can expedite the process.

Once your product is received, please allow up to 2 weeks for us to inspect and process your return. You will receive a confirmation email indicating that your return has been successfully processed. Refunds may take 5 - 10 business days depending on your issuing bank.

Assembly & Installation

This section of the manual will walk you through how to assemble and install your lift system.

Before you begin: Ensure your cabinet has been designed to block the lift system 2″ away from your hinge point. Failure to block the lift forward will result in inconsistent operation and damage to the lift system.

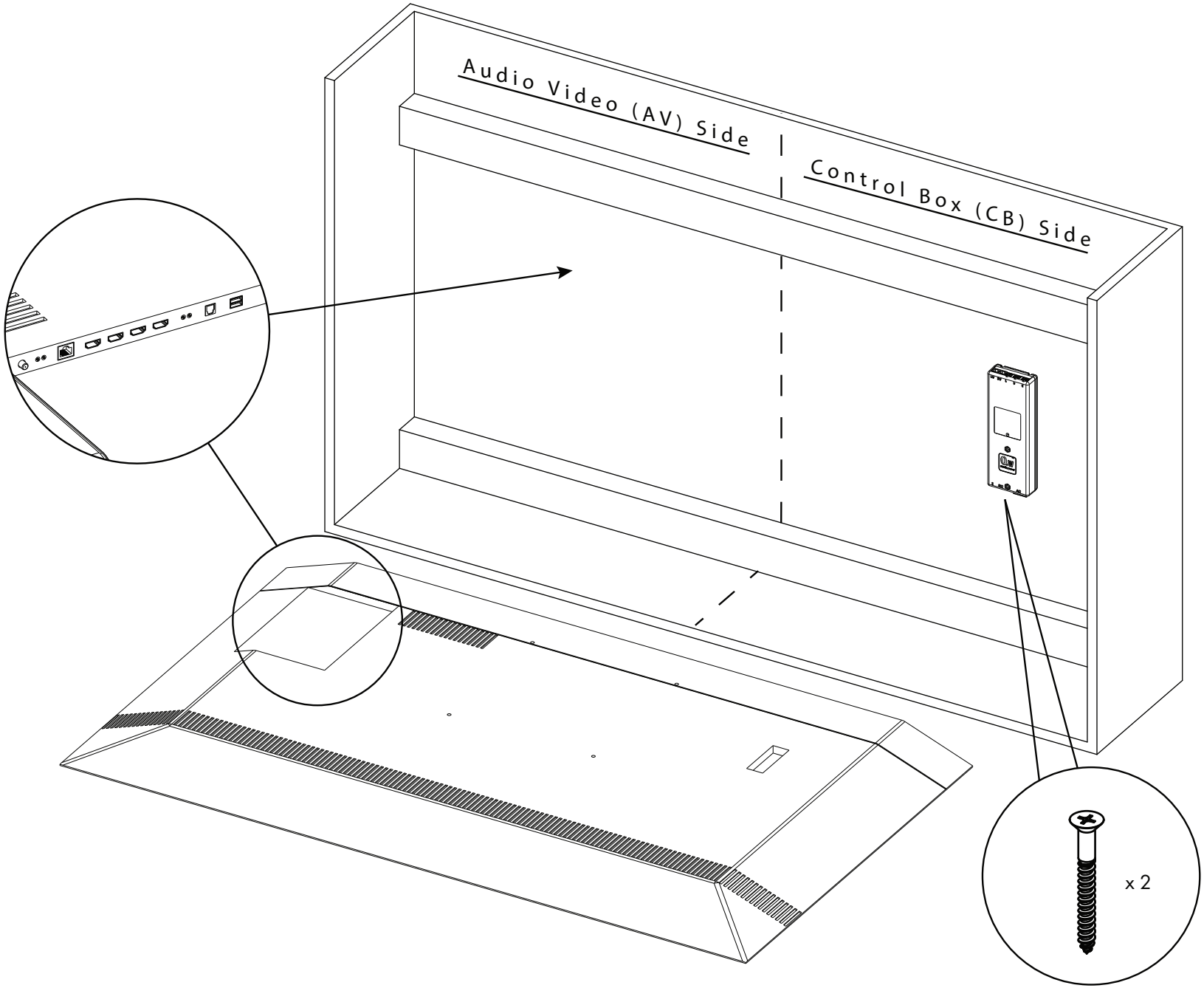

1a. Identify which side of your TV the AV ports are on; this will be the AV Side of the Cabinet. The other side will be where you mount your control box; this will be the CB Side. For Illustration purposes, the rest of this manual will show an installation with the AV side on the left and the CB side on the right.

1b. Secure your Control Box to the CB side of the cabinet using (2)#10 x 1-3/4 FHWS.

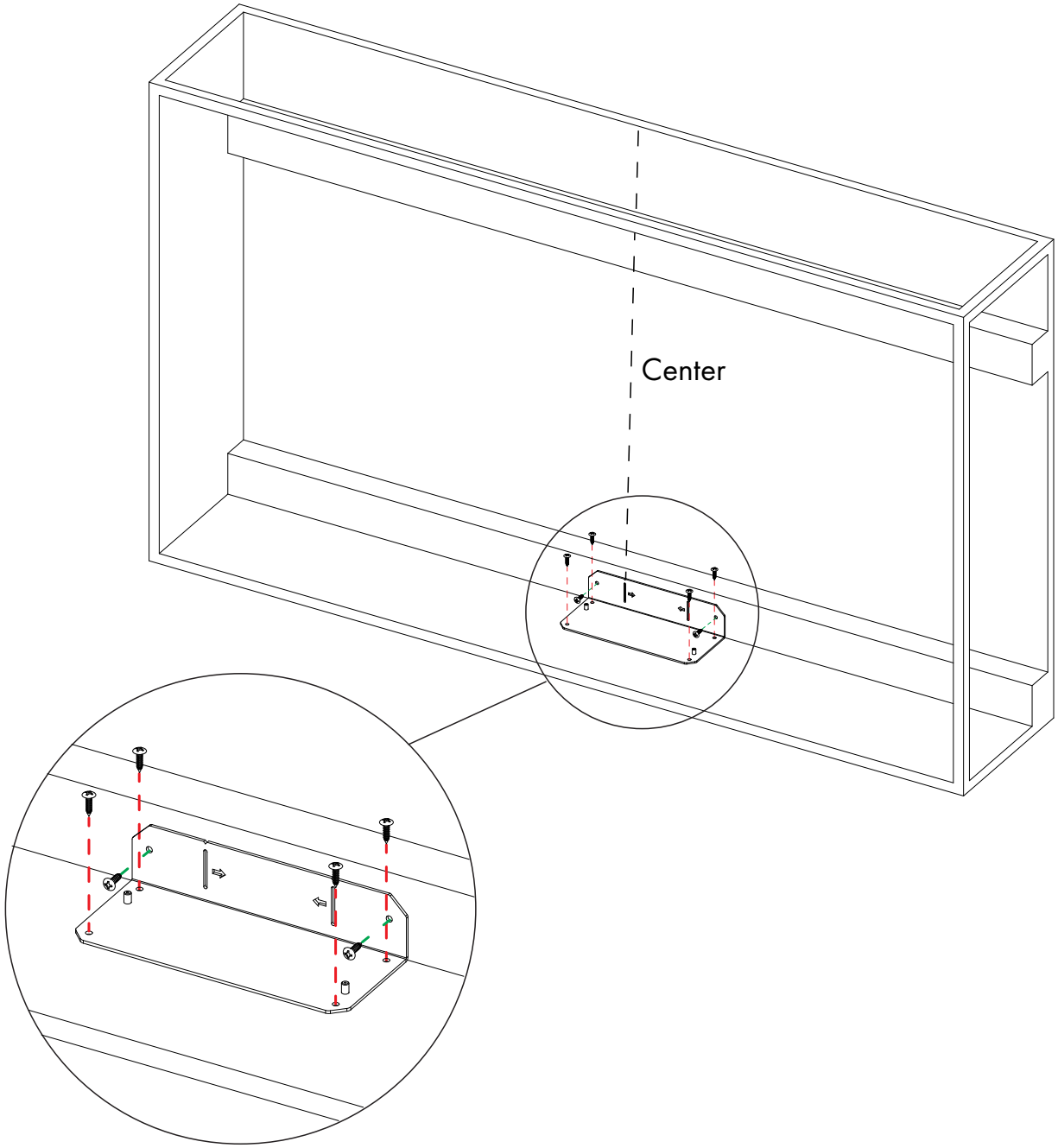

2. Attach the Base Mount to the base and rear panels of the cabinet using (6) #10 x 3/4 THWS by aligning the center line on the Base Mount with the center of the cabinet.
Note: If your CB Side is on the right, align the center line with the arrow pointing to the right with the center of your cabinet. If your CB side is on the left, align the center line with the arrow pointing to the left.

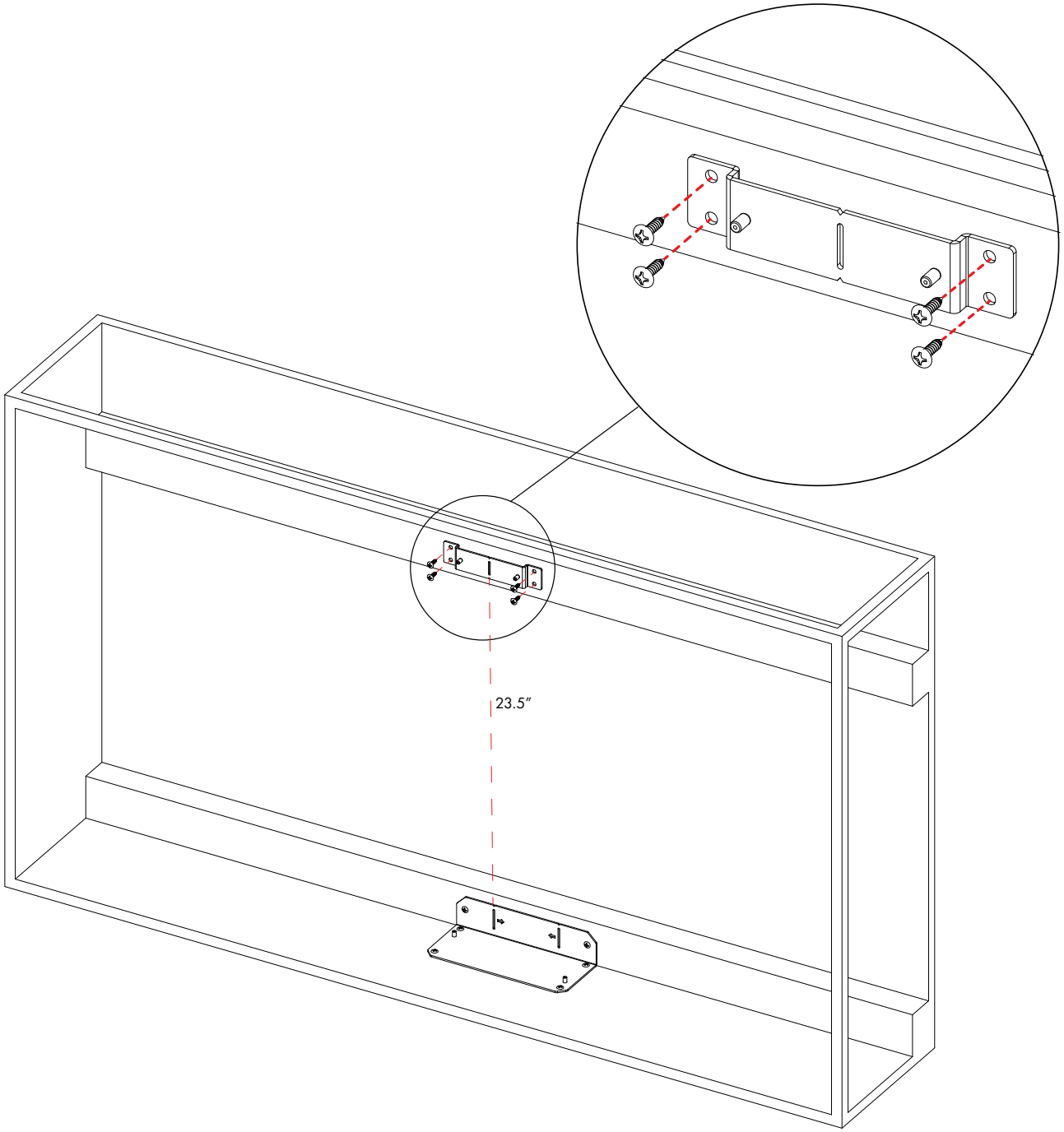

3. Attach the Column Clamp Base to the rear of the cabinet 23.5″ [59.7cm] from the top of the Base Mount using (4) #10 x 3/4 THWS.
Note: Use the Center line Cutout on the Base Mount and Column Clamp Base to assist with locating them on the inside of your cabinet.

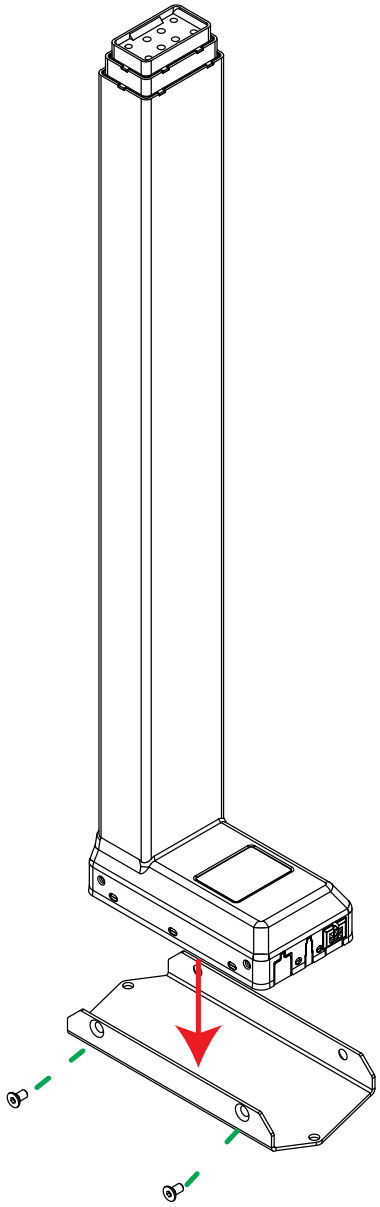

4a. Attach the Lift Column Mount to the base of the Lift Column using (4) M6 x 12 FHMS

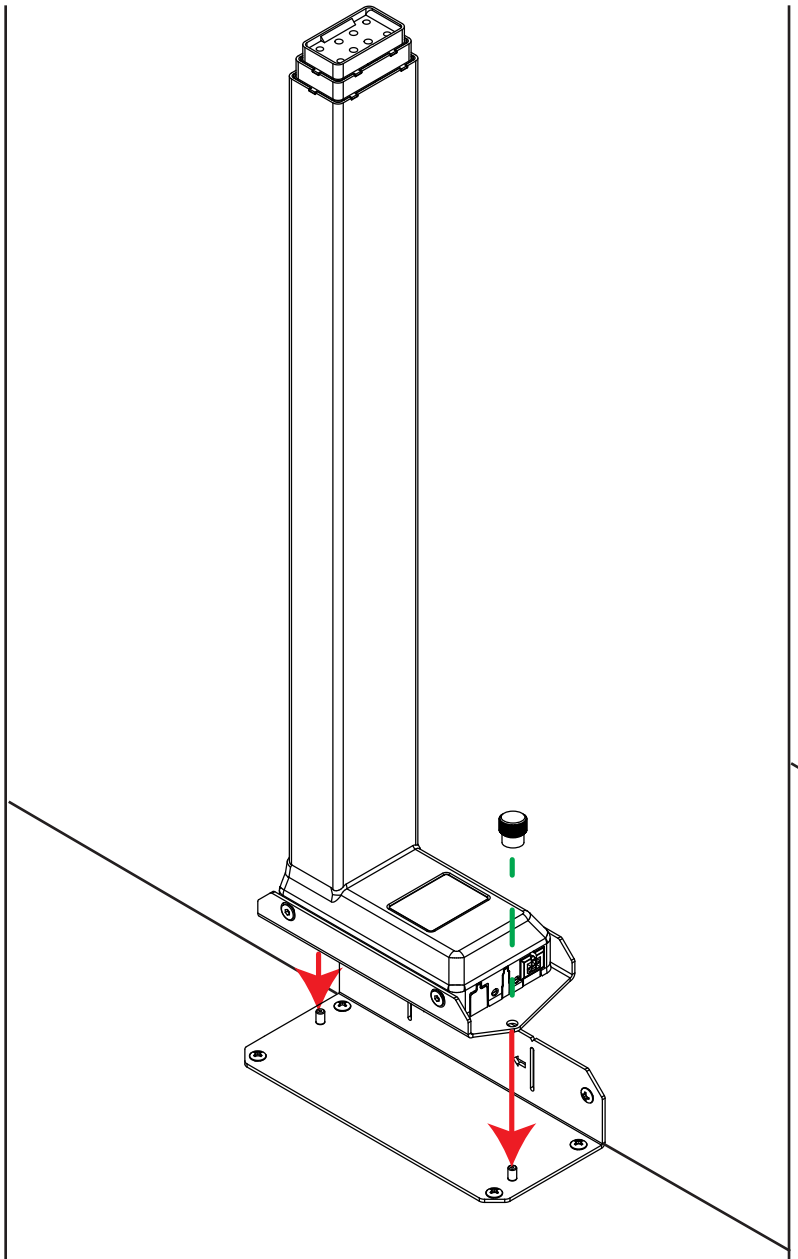

4b. Attach the Lift Column Assembly to the Base Mount using (2) Thumb Screws. Ensure the foot of the column is facing the same direction as the CB Side.

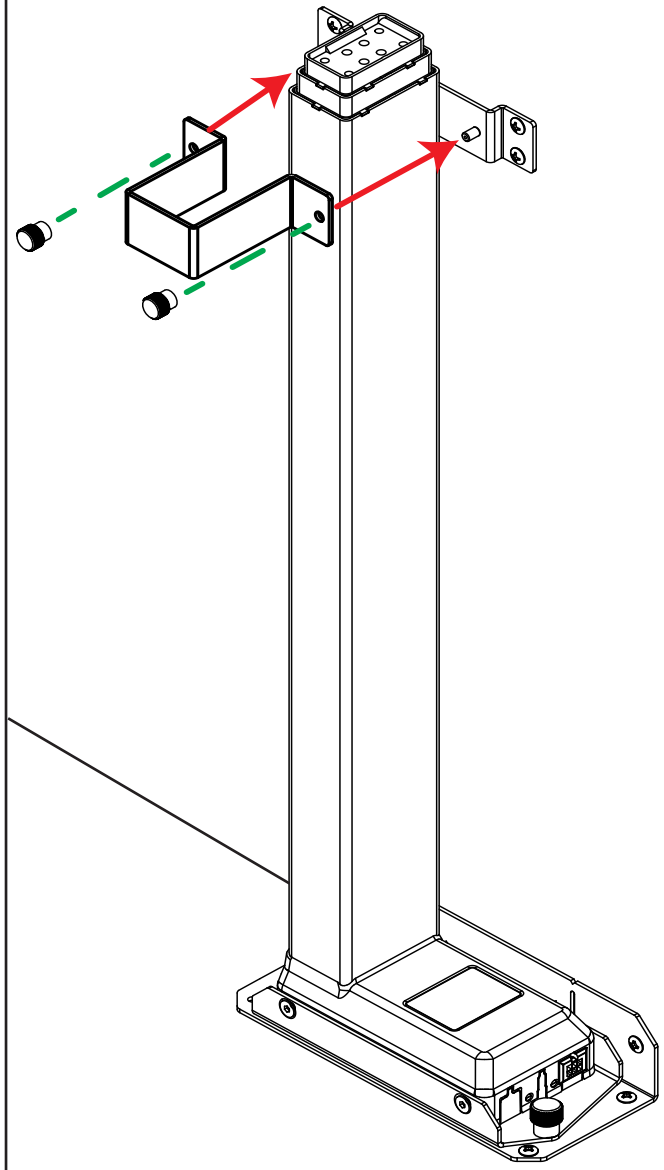

5. Slide the Column Clamp Extension around the front of the lift column and secure it to the Column Clamp Base using (2) Thumb Screws.

Connecting the Lift System

This section of the manual will walk you through how to connect your lift system.

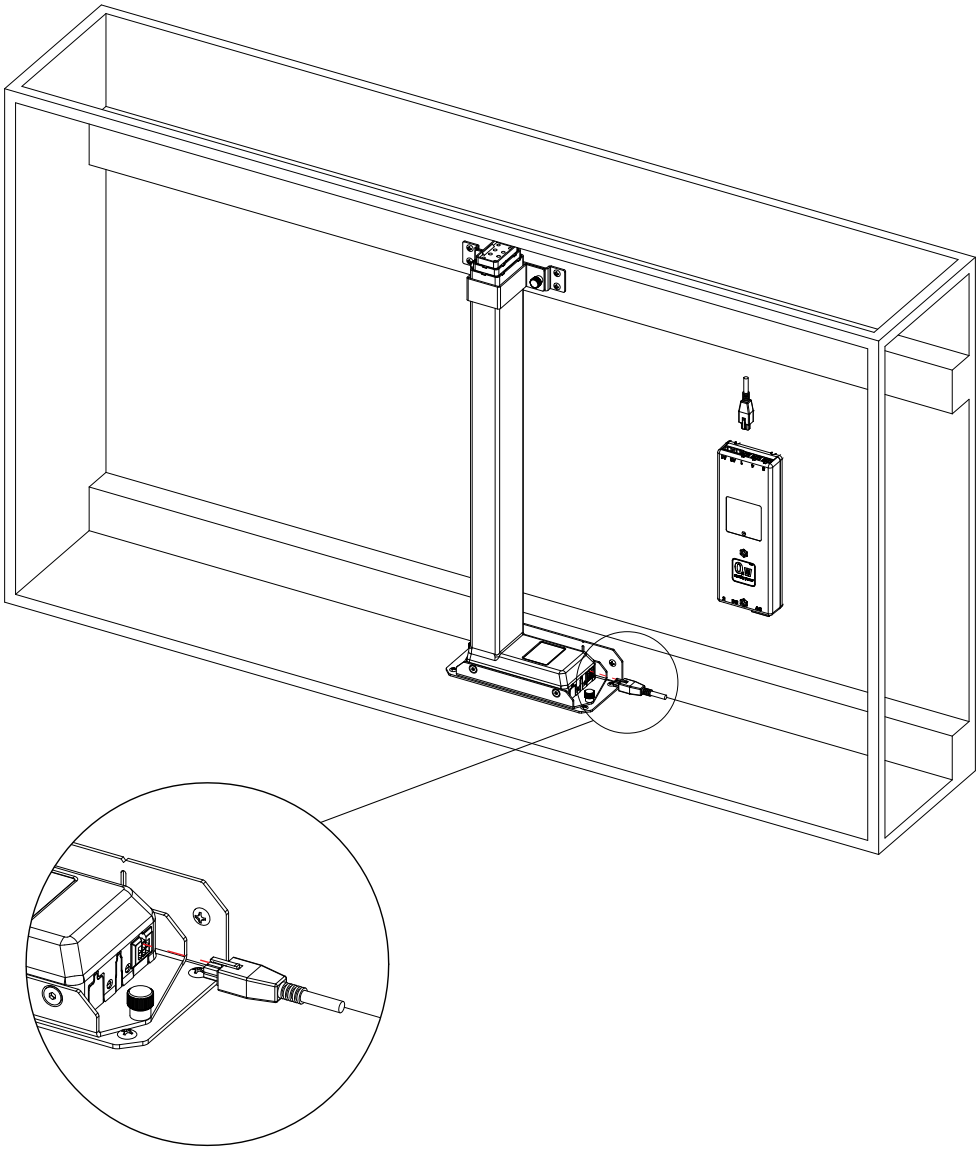

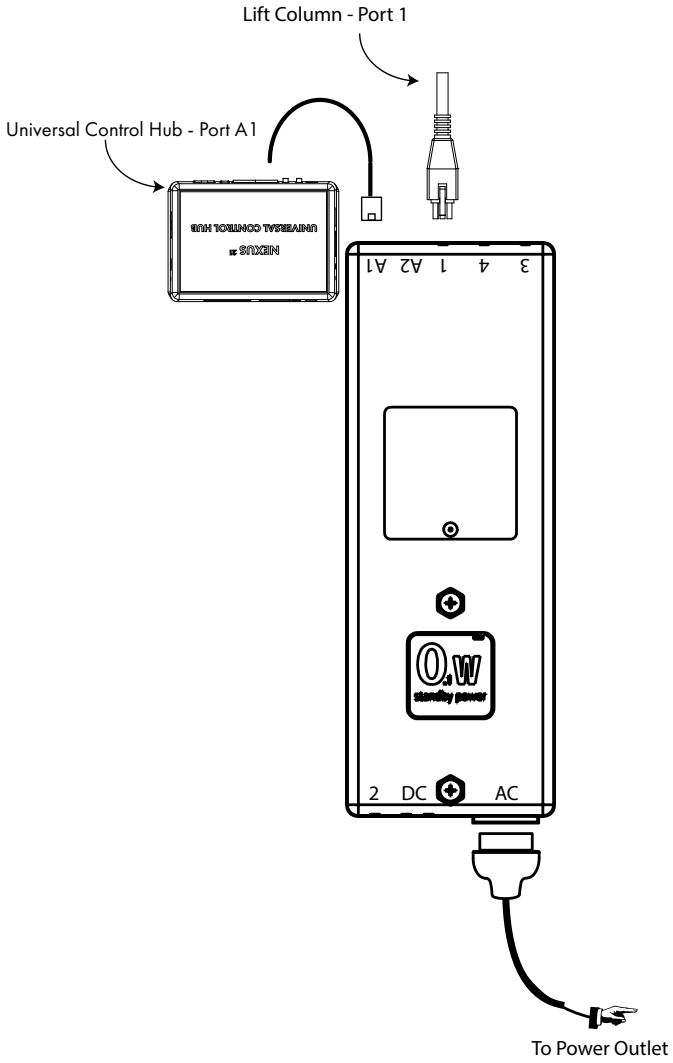

6a. Connect one end of the Motor Cable to the Lift Column and the other end to Port #1 on the Control Box.

6c. Connect to the Power Cord to the AC Port and the Universal Control Hub to Port A1 on the Control Box.

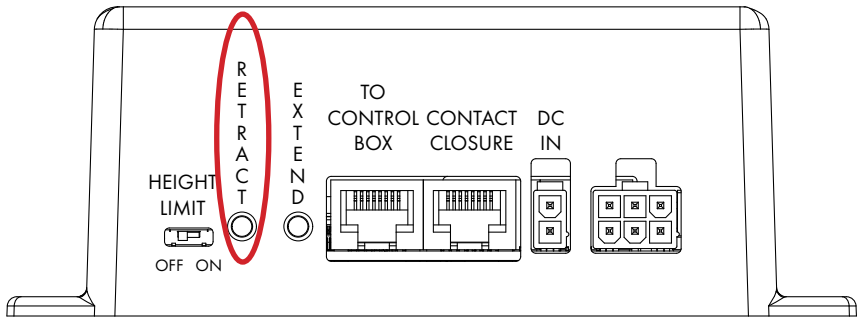

7. Press the retract button on the Universal Control Hub, release, then press and hold it for 5 seconds to perform an 'Initialize'.

During this time, you should observe a slight movement from your system indicating it has successfully been initialized. If you do not observe this movement, repeat this step.

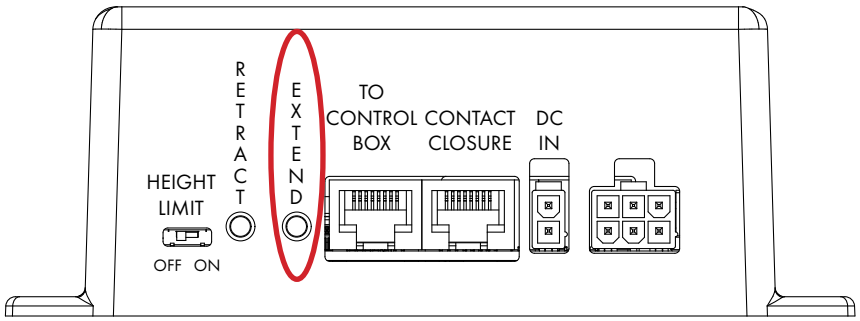

8. Test the function of the lift system by pressing the extend button on the Universal Control Hub to raise the system fully.

Once fully extended, press the retract button to lower the lift system.

Assembly & Installation Continued

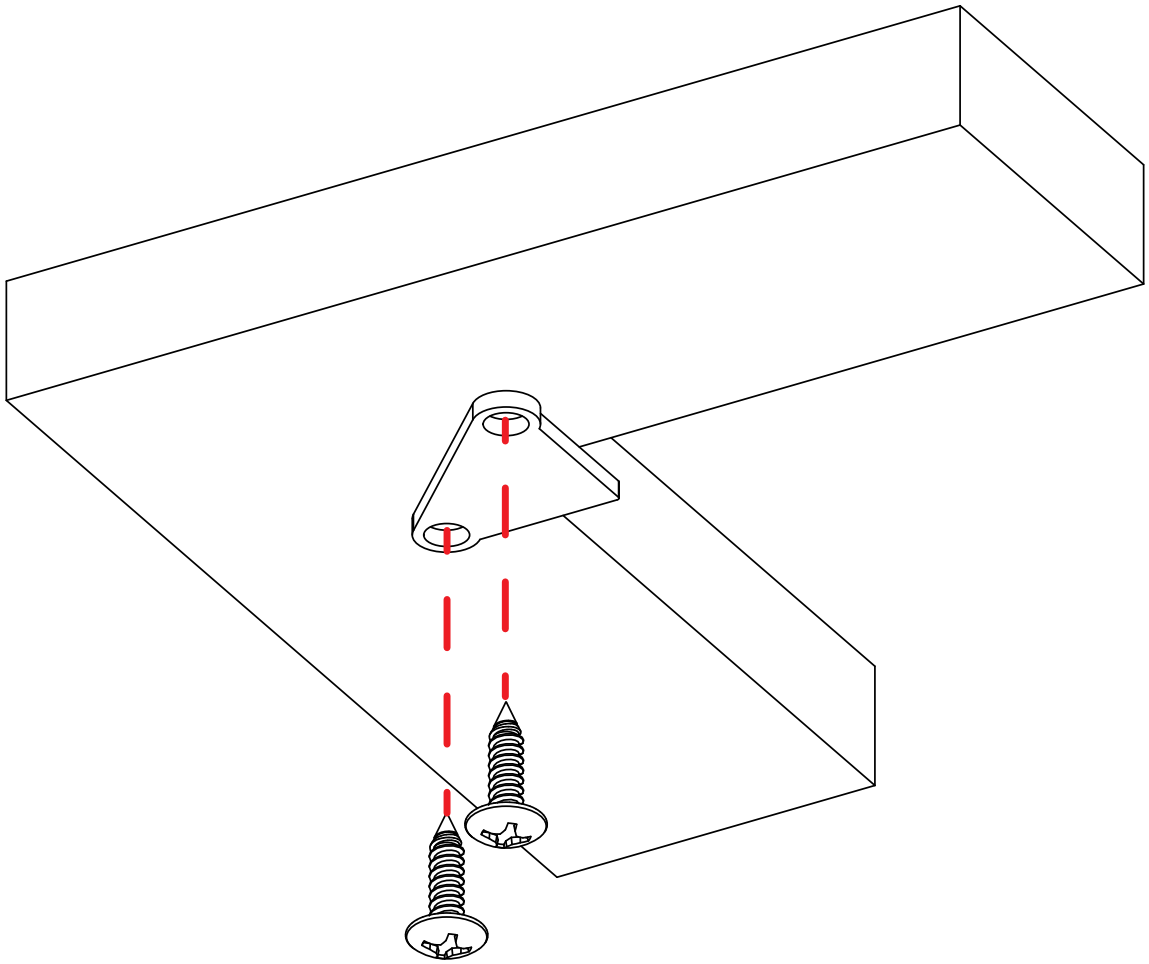

9. If your cabinet does not have a built in Lid-Catch, install the provided Lid Corner Catches from the Hardware Pack in each corner of the cabinet using (8) #10 x 3/4 THWS.

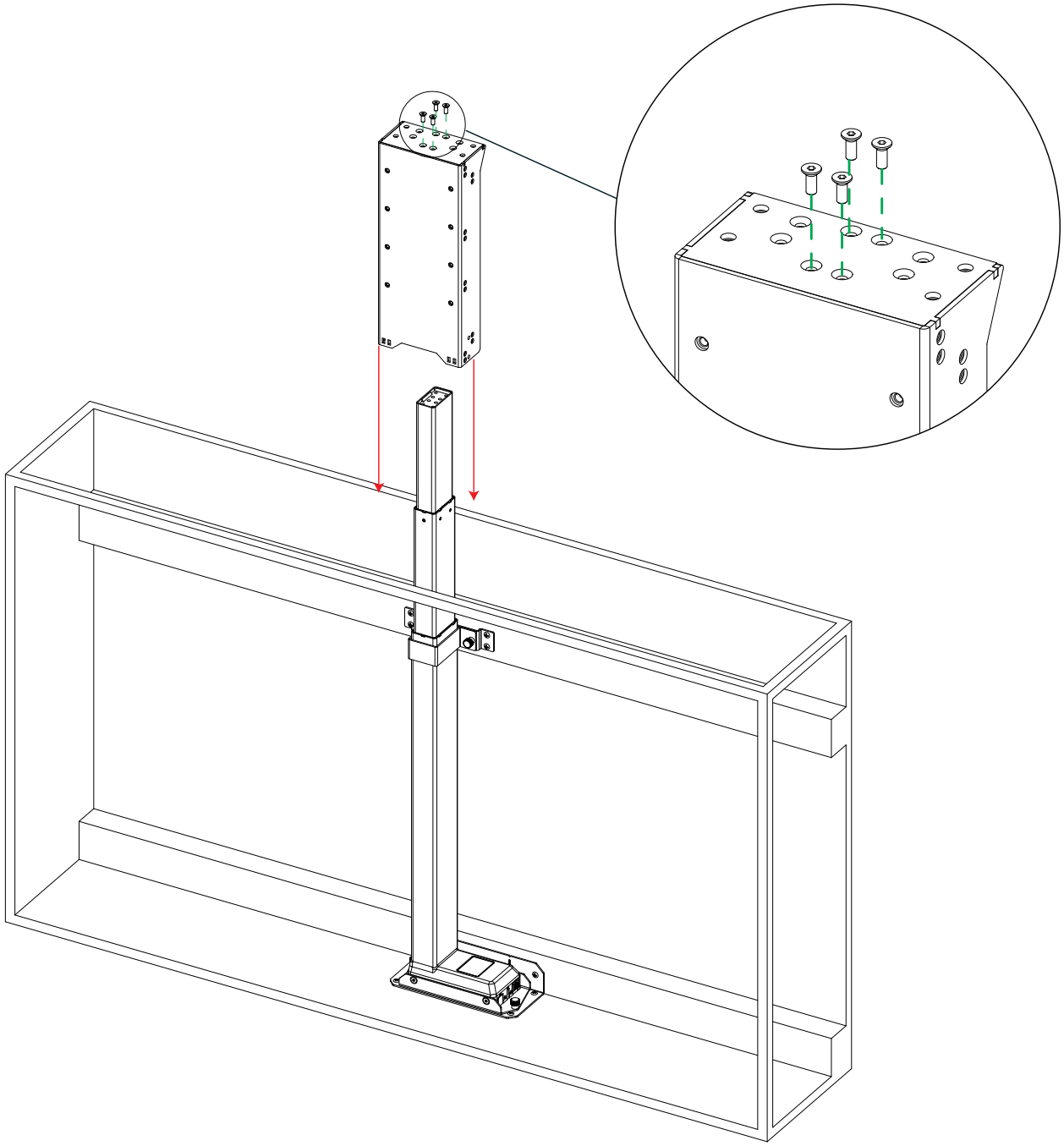

10a. Partially extend the lift system by pressing the Extend button on the Universal Control Hub. Once the system reaches an appropriate height, press the Retract button to stop it.

10b. Attach the Screen Support to the top of the Lift Column using (4) M6 x 16 FHMS.

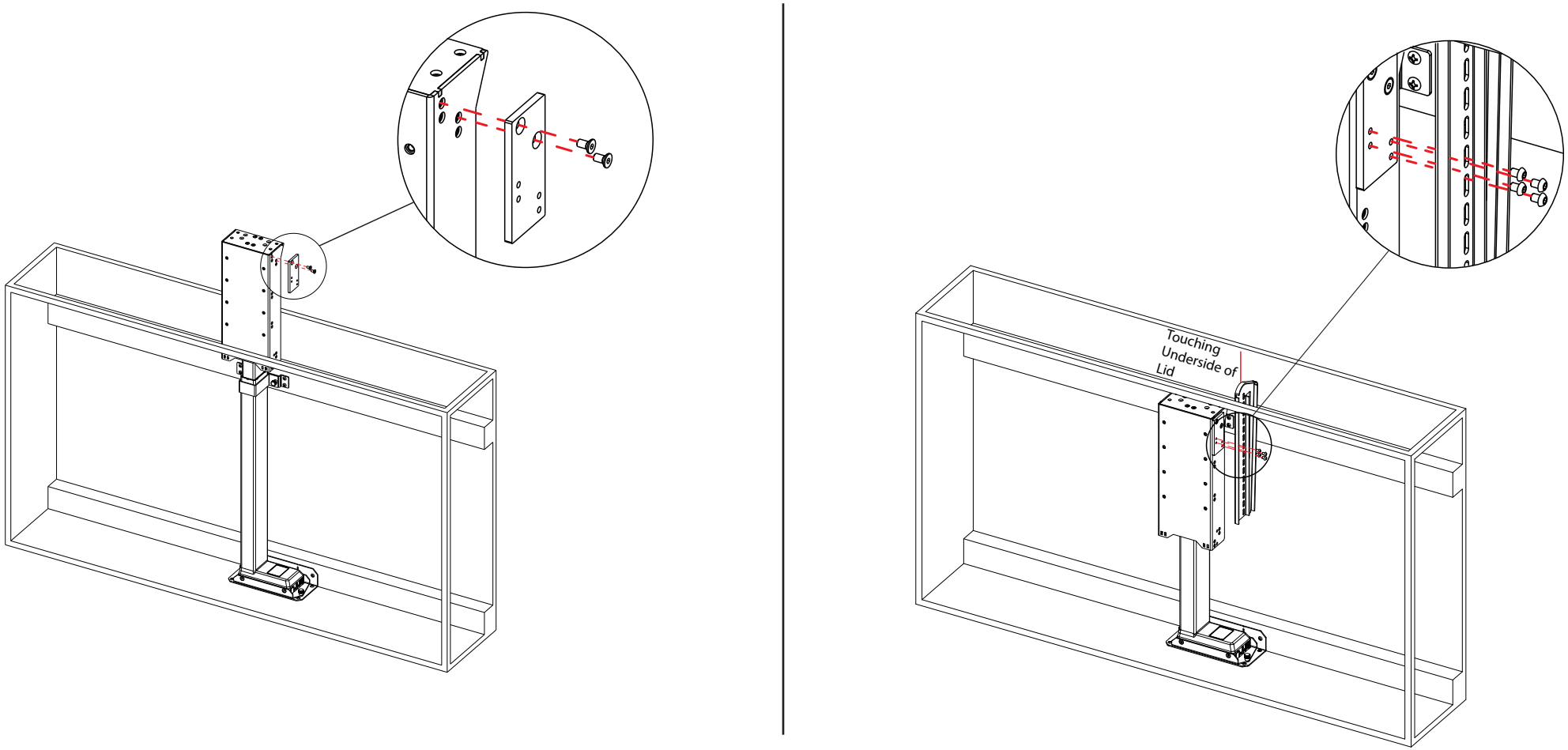

11a. Install the Hinged Top Guide Adapter on the right side of the Screen Support using (2) M6 x 12 FHMS in the countersunk holes.

11b. Lower your lift system by pressing the Retract button on the Universal Control Hub.

11c. Apply the provided Hook and Loop Strip to the back face of the Hinged Top Guide. Then, position your Hinged Top Guide along the right side of the Screen Support so the top of the Hinged Top Guide is touching the underside of your lid when the lift is fully retracted. Install the Hinged Top Guide using (4) M6 x 8 BHMS.

Note: After installing the Hinged Top Guide, rest the cabinet lid on the Lid Catches to ensure the HTG is not adjusted too high.

TV Mounting

This section will walk you through mounting your TV to your L-65 Lift System.

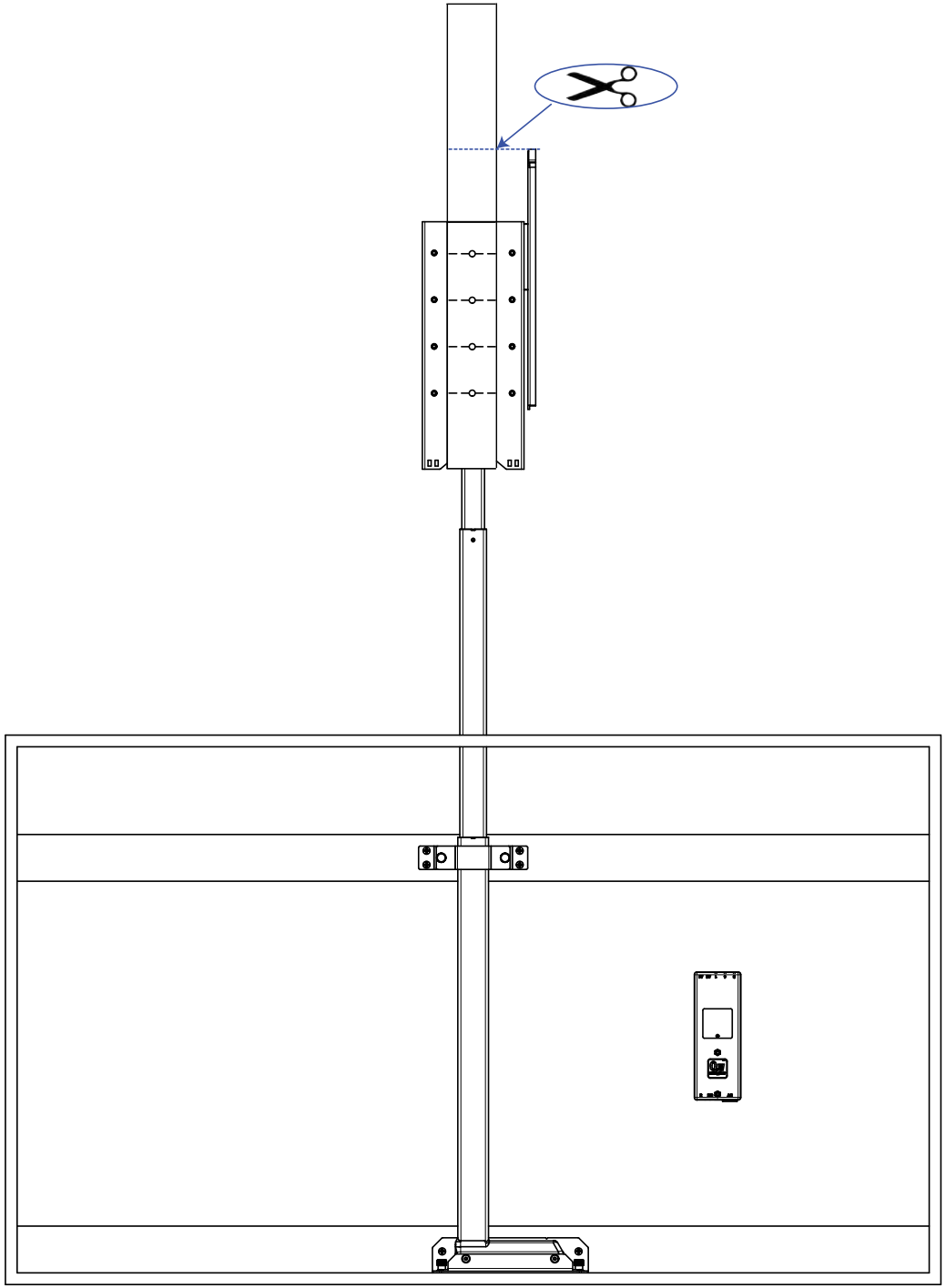

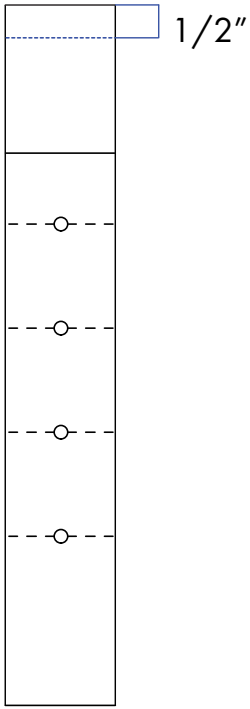

13a. Raise your lift, align the template with the holes on the screen support, then fold or cut the template to be flush with the top of the Hinged Top Guide.

13b. Measure 1/2″ [1.3cm] from the new top of the template and draw a line. This line indicates the position for where the top of the TV will be.

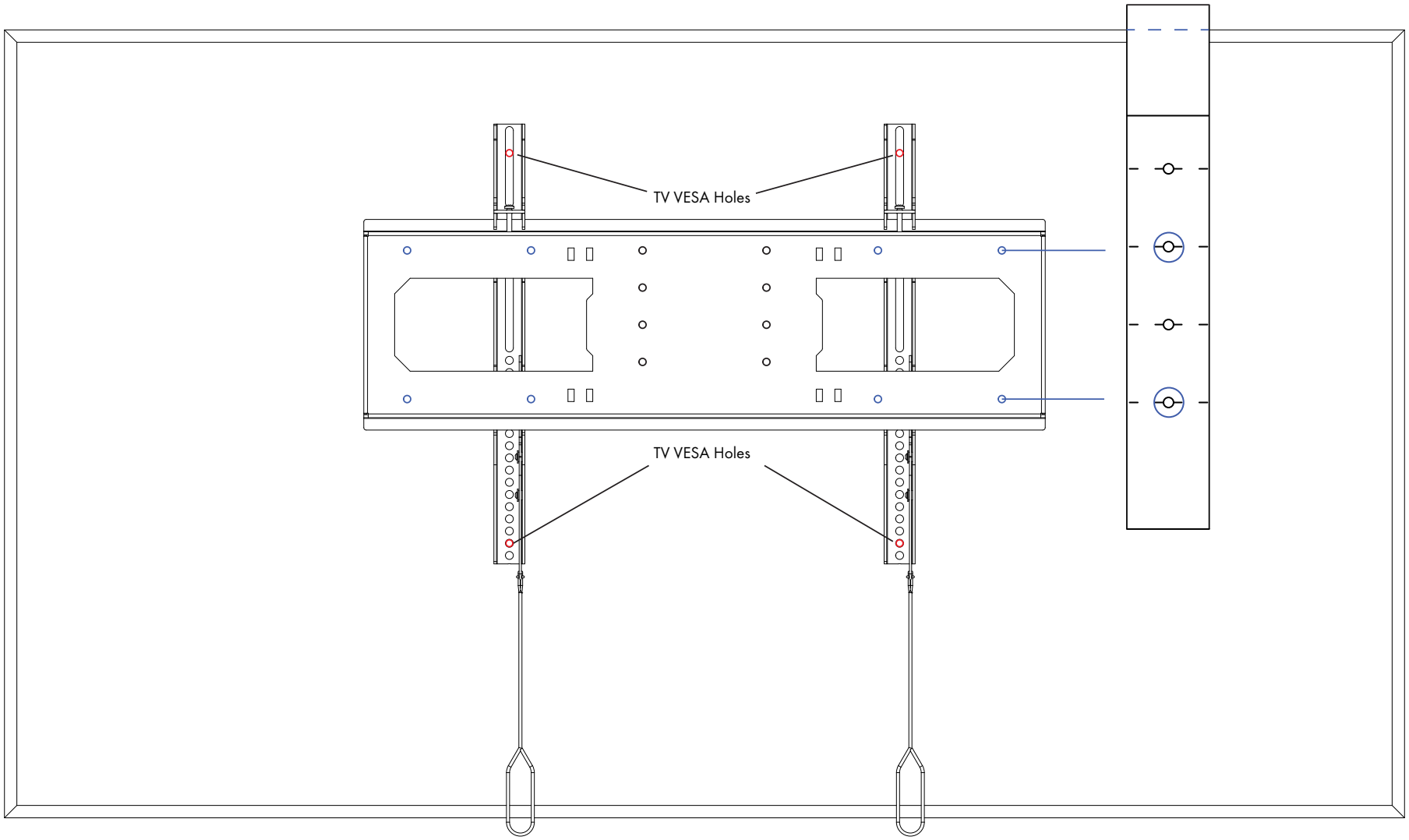

14a. Lay the TV flat on the ground with the screen down. Lay the TV Mounting Template on the back of the tv, aligning the line you just drew with the top edge of the TV.

14b. Attach the Vertical Mounting Bars to the Screen Backplate, ensuring the spring-loaded latch on each Vertical Mounting Bar is engaged against the Screen Backplate.

14c. Place the Screen Backplate, with the Vertical Mounting Bars attached, on the back of the TV, positioning the Vertical Mounting Bars over the VESA Holes.

14d. Adjust the vertical position of both until (2) of the holes on the Screen Backplate line up with the lines on the template and the Vertical Mounting Bars align with the VESA holes on your TV. If needed, use the Vertical Mounting Bar Extensions included with the Vertical Mounting Bars.

14e. Mark the holes for the Screen Backplate and the hole for mounting your TV on the Vertical Mounting Bars.

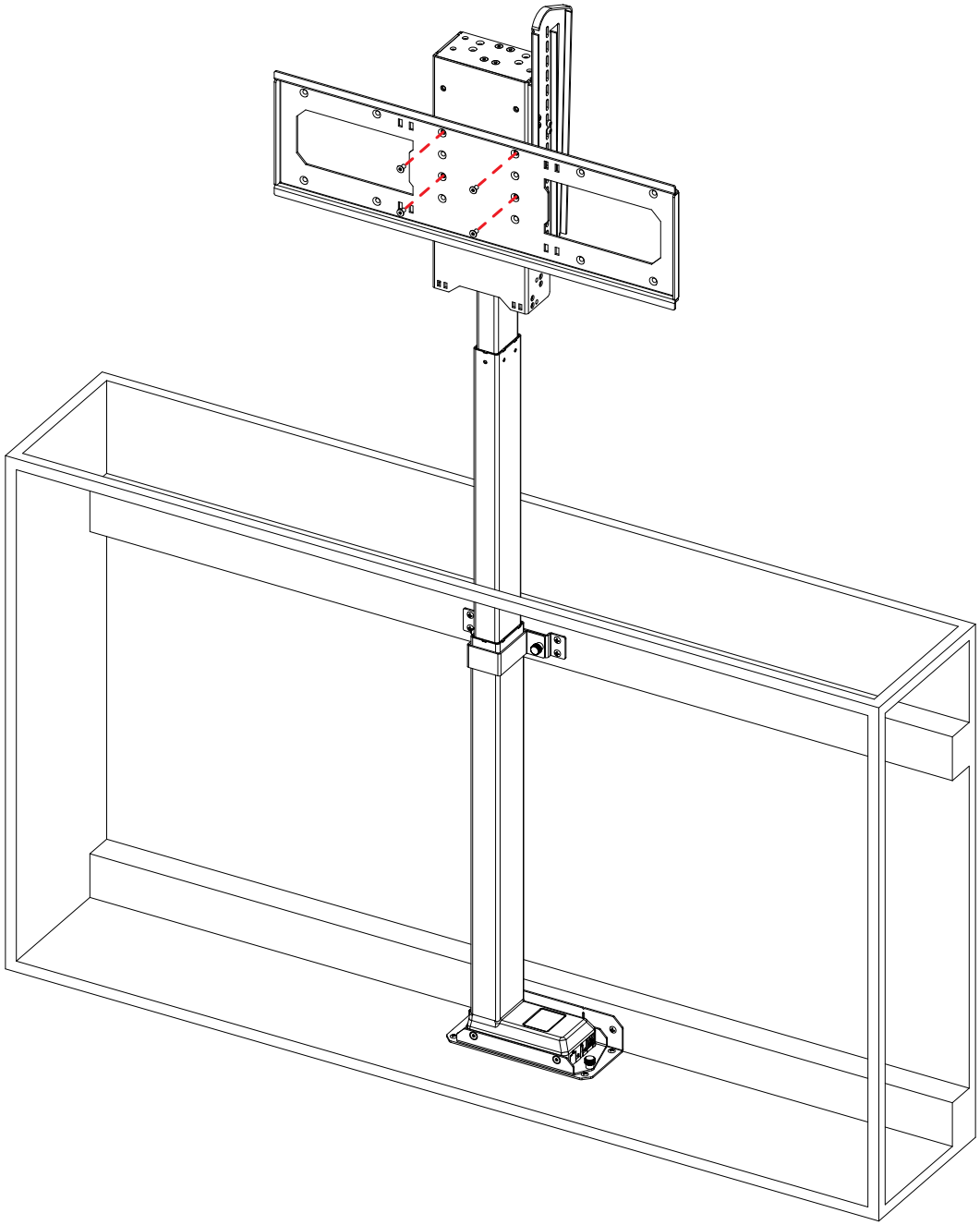

15a. Disconnect the Vertical Mounting Bars from the Screen Backplate.
Note: You can disengage the spring-loaded latch on the Vertical Mounting Bars by pulling the straps at the bottom.

15b. Attach the Screen Backplate to the holes on the Screen Support that correspond with the marked holes on your TV Mounting Template using (4) M6 x 12 FHMS.

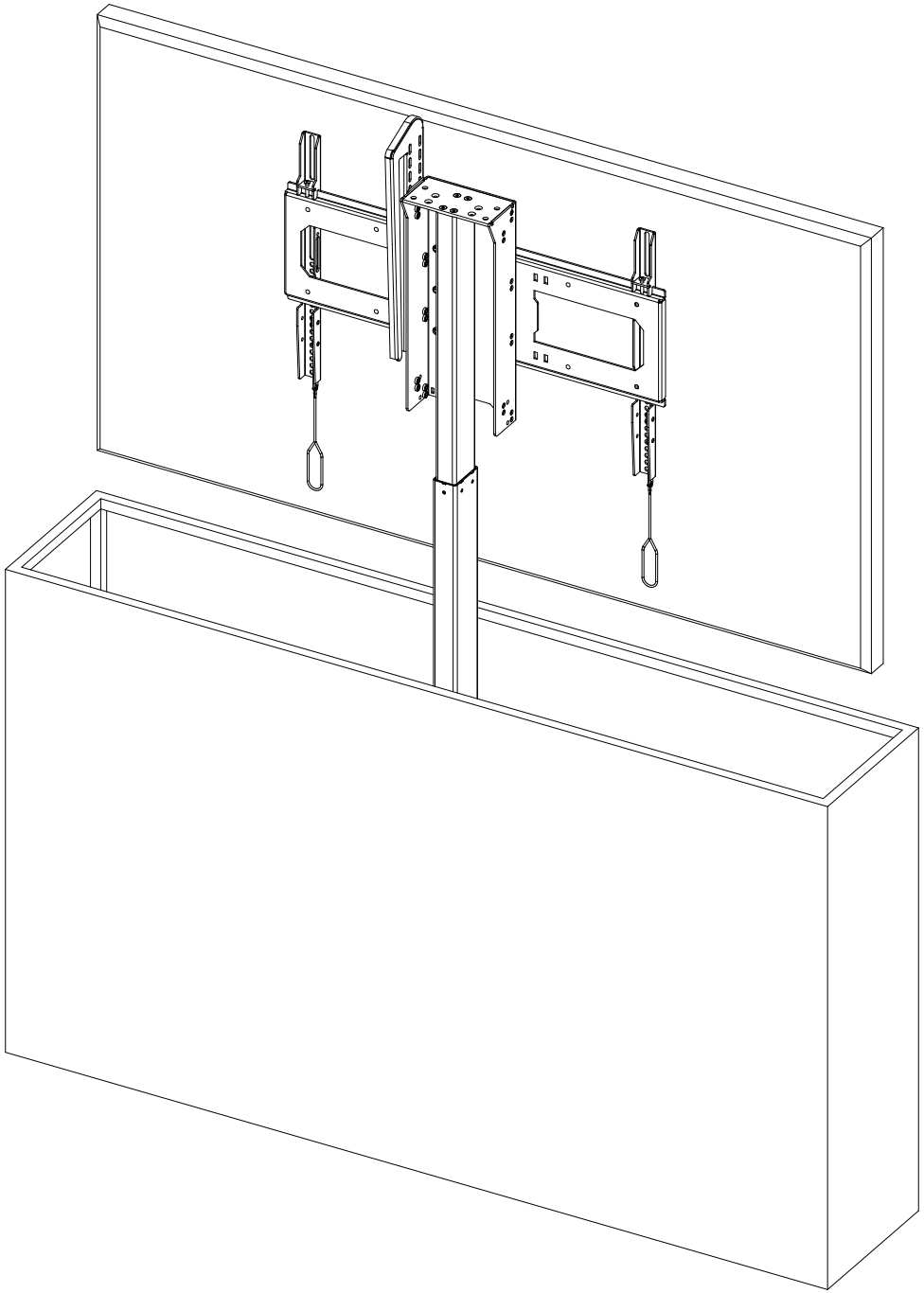

16a. Attach the Vertical Mounting Bars to your TV using the marked holes. <u>If you are using a soundbar, follow the information sheet included with it first.</u>

16b. Hang your TV on the Screen Backplate, ensure the spring-loaded latch on each Vertical Mounting Bar is engaged with the Screen Backplate. Then, press the Retract button on the Universal Control Hub to lower your lift system.
Note: If needed, the level of the TV can be adjusted by tightening the bolts on the back of each Vertical Mounting Bar.

Lid Testing

This section will walk you through testing the lid placement on your L-65 Lift System to ensure it has been properly installed.

Note: Install your lid using your hinge of choice prior to performing this test.

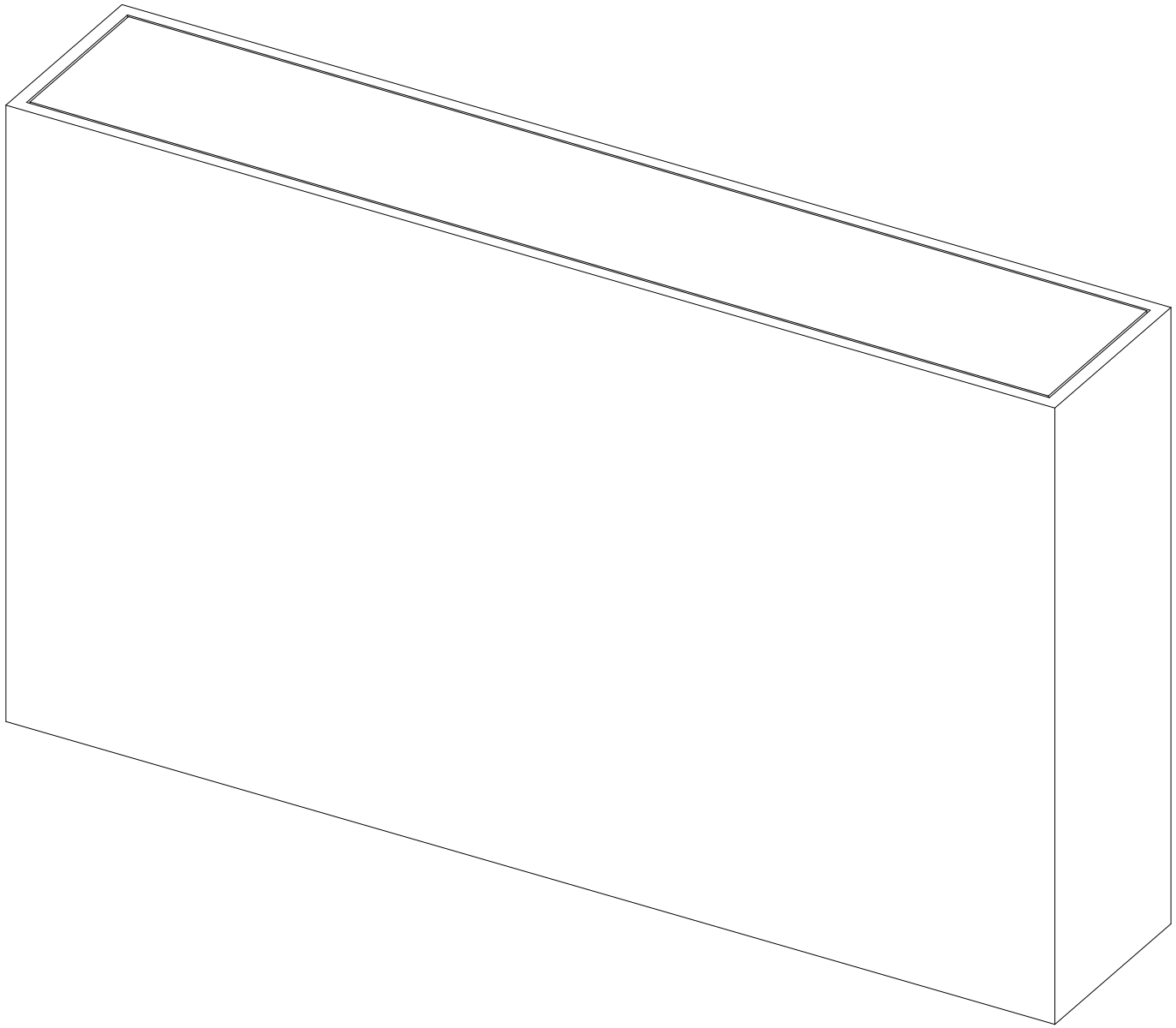

17. Starting with your lift in the retracted position, press the Extend button on the Universal Control Hub and raise the lift.

Note: If the lift system will not raise, or stops moving shortly after the Extend button is pressed, this indicates that the Hinged Top Guide is positioned too low. Manually move the lid and raise the Hinged Top Guide, then repeat this test.

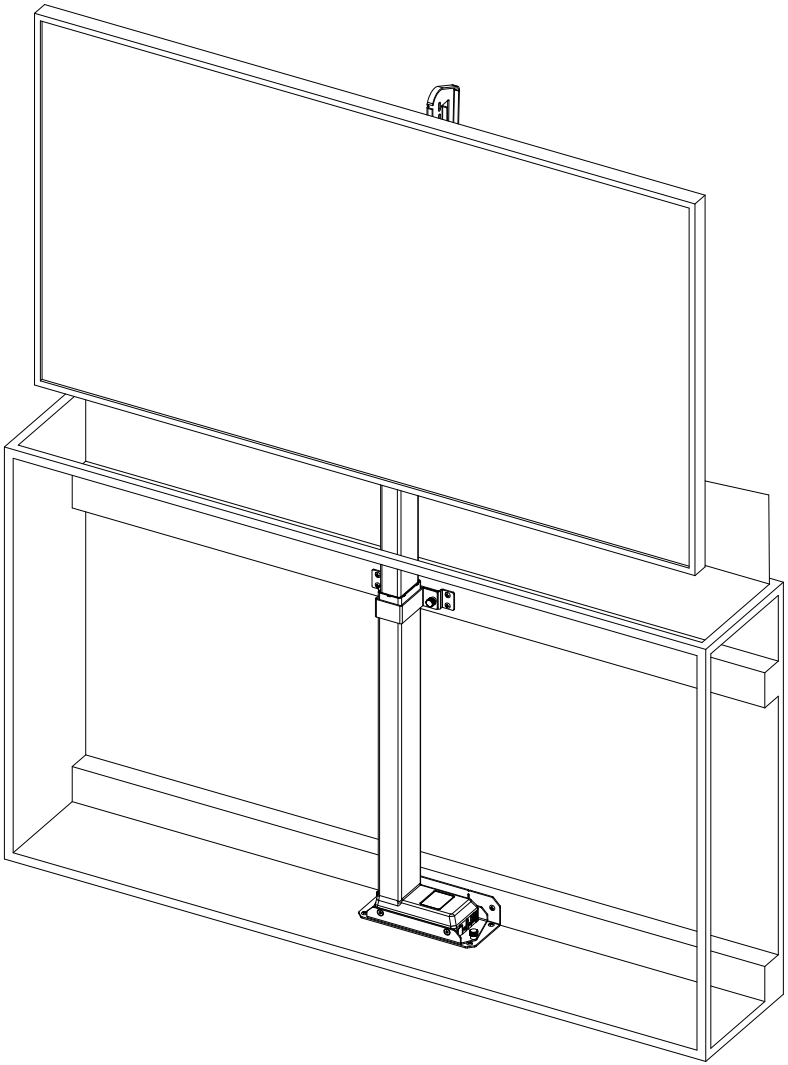

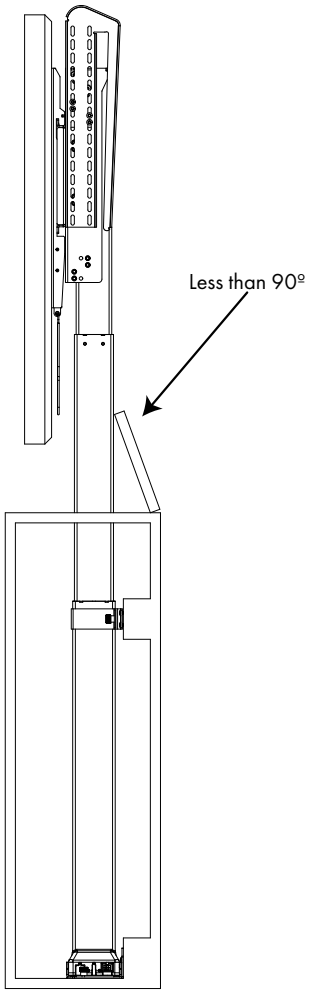

18a. With the lift system fully raised, first check to ensure your lid rests at an angle less than 90º. Then, press the Retract button on the Universal Control Hub to begin lowering the lift system.

Note: If the lift system raises after it has reached the bottom, this indicates the Hinged Top Guide is positioned too low. If your lid does not reach a fully flush state at any point, this indicates the Hinged Top Guides are positioned too high. Manually move the lid and raise or lower the Hinged Top Guide, then repeat this test.

1 - 888 - 981 - 9919
www.nexus21.com